JOCHA14B-L5X Series

Rev.A.1.0

DESCRIPTION:

The products are 10MBd high-speed opto-couplers in the LSOP5 and LSOP5W package. The device consists of a high efficient AlGaAs Light Emitting Diode and a high speed optical detector. This design provides excellent AC and DC isolation between the input and output sides of the optocoupler. The output of the optical detector features an open collector Schottky clamped transistor. The enable function allows the optical detector to be strob.

] Ŏ ˯ v A ! M D A Ţ R #o φ m M n

ABSOLUTE MAXIMUM RATINGS (Temperature=25°C)

Parameter	Symbol	Value	Unit

	Isolation Resistance	R_{ISO}	DC500V 40~60%R.H.	-	10^{12}	-	Ω
	Floating Capacitance	C_{IO}	V=0, f=1MHz	-	1	-	pF
Switching Characteristics	Trigger LED Current	I_{FT}	V_{CC}=5V, V_O=V_{OL}	-	-	5	mA
	Propagation Delay Time to Logic Low	t_{PHL}	C_L=15pF, R_L=350Ω, I_F=7.5mA	-	-	60	ns
	Propagation Delay Time to Logic High	t_{PLH}		-	-	60	ns
	Pulse width distortion	$\|t_{PHL}-t_{PLH}\|$		-	-	35	ns
	Common Mode Transient Immunity at Logic High	CM_H	V_{CC}=3.3V, I_F=0mA, V_{CM}=1000V, R_L=350Ω	10	15	-	kV/μs
	Common Mode Transient Immunity at Logic Low	CM_L	V_{CC}=3.3V, I_F=10mA, V_{CM}=1000V, R_L=350Ω	10	15	-	kV/μs
	Rise Time	tr	C_L=15pF, R_L=350Ω, I_F=7.5mA	-	30	-	ns
	Fall Time	tf		-	30	-	ns

Recommended Operating Conditions

Characteristics	Symbol	Min.	Typ.	Max.	Unit
Operating Temperature	T_a	-40	-	85	℃
Supply Voltage	V_{CC}	2.7	-	3.6	V
		4.5	-	5.5	
Low Level Input Current	I_{FL}	0	-	250	μA
High Level Input Current	I_{FH}	7	-	15	mA

Output Pull-up Resistor	R_L	330	-	4k	Ω
Fan Out (at R_L=1kΩ per channel)	N	-	-	5	TTL Loads

ORDERING INFORMATION

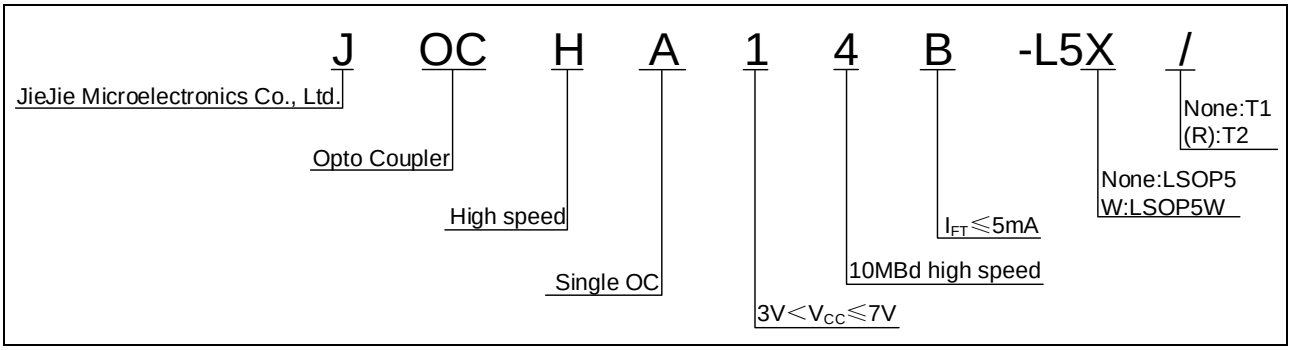

Packing Quantity			
Option	**Quantity**	**Quantity – Inner box**	**Quantity –Outer box**

MARKING

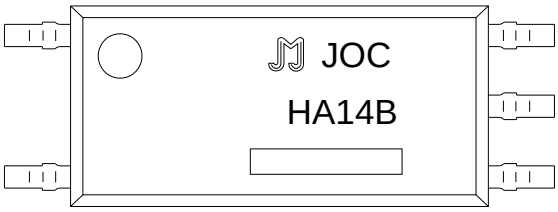

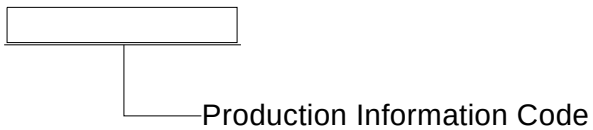

Characteristics Curves

FIG.1: High Level Output Current vs. Ambient Temperature

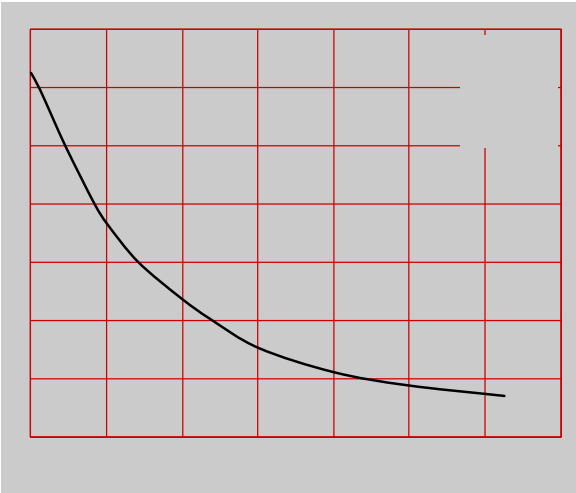

FIG.2: High Level Output Current vs. Ambient Temperature

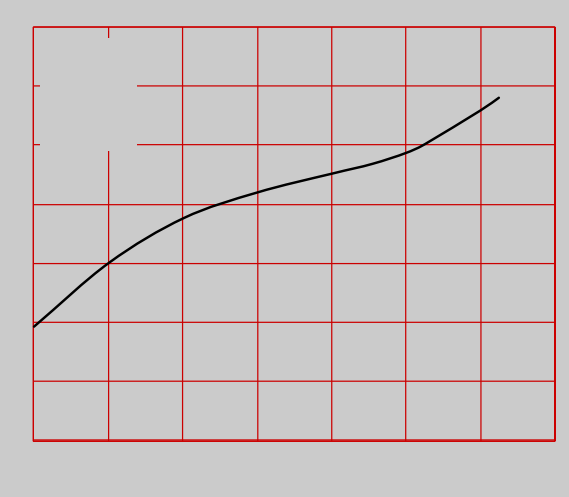

FIG.3: Input Threshold Current vs. Ambient Temperature

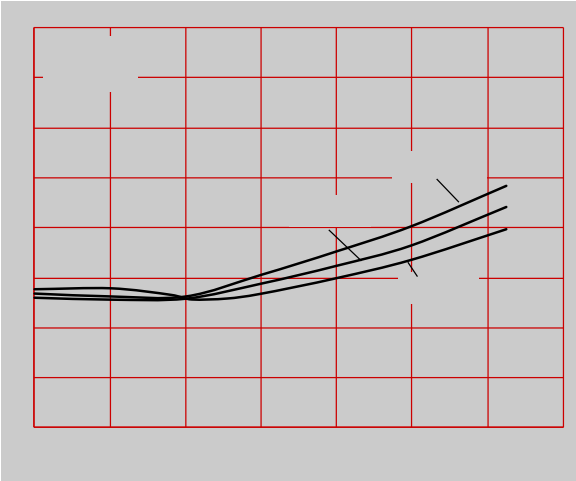

FIG.4: Input Threshold Current vs. Ambient Temperature

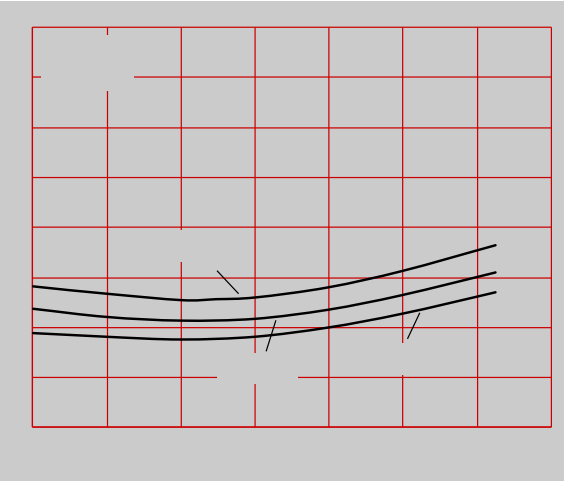

FIG.5: Low Level Output Voltage vs. Ambient Temperature

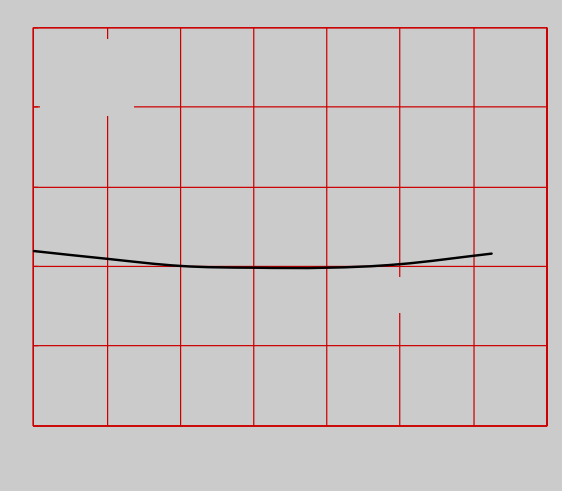

FIG.6: Low Level Output Voltage vs. Ambient Temperature

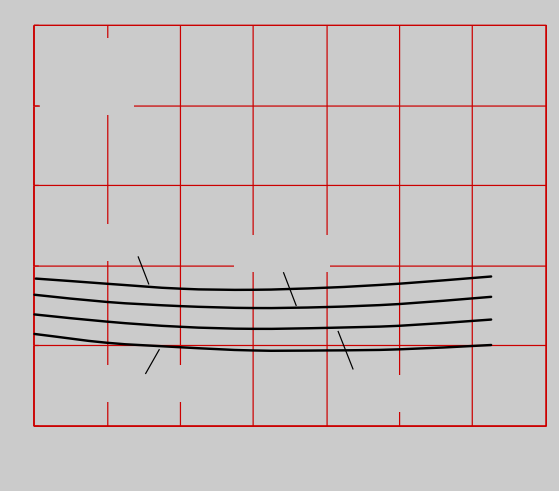

FIG.7: Low Level Output Current vs. Ambient Temperature

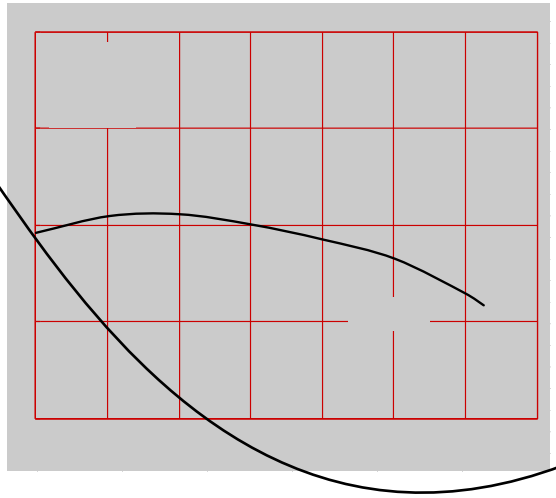

FIG.8: Low Level Output Current vs. Ambient Temperature

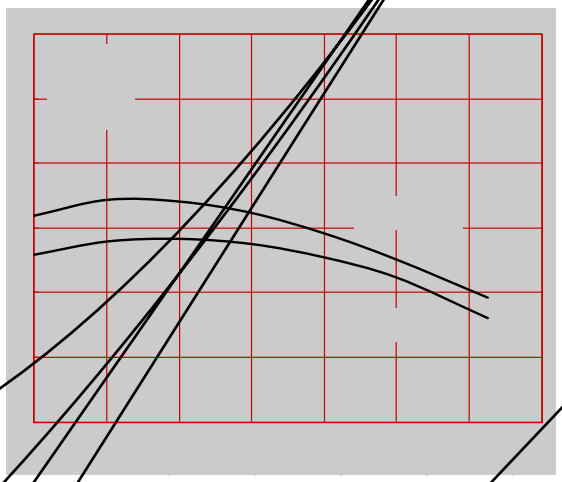

FIG.9: Input Forward Voltage vs. Input Forward Current

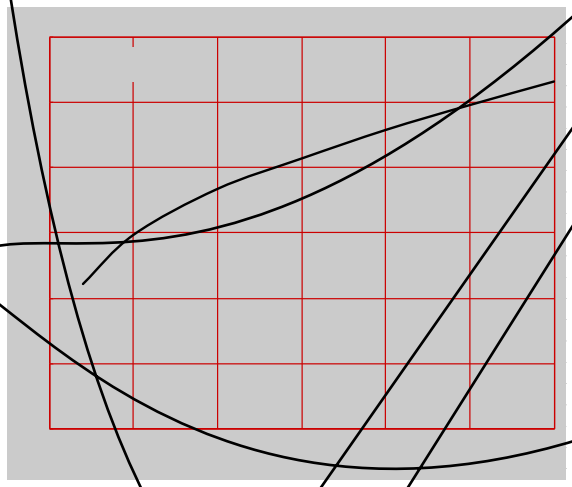

FIG.10: Forward Voltage vs. Ambient Temperature

FIG.13: Pulse Width Distortion vs. Ambient Temperature

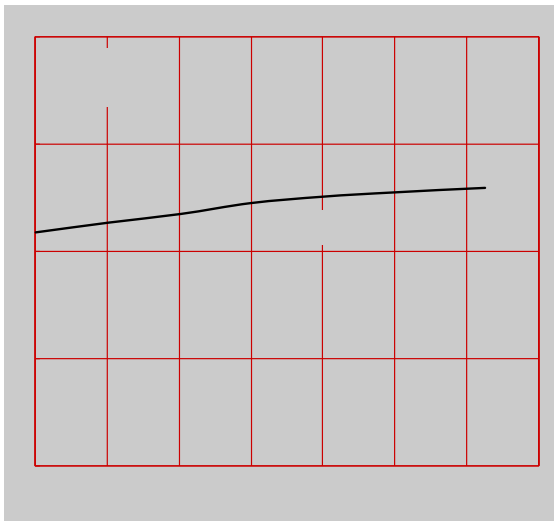

FIG.14: Pulse Width Distortion vs. Ambient Temperature

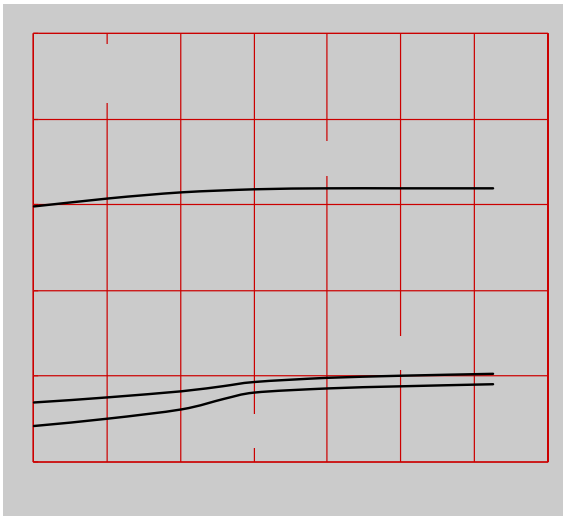

TEST CIRCUITS

Fig.15: Switching Time Test Circuit and Waveform

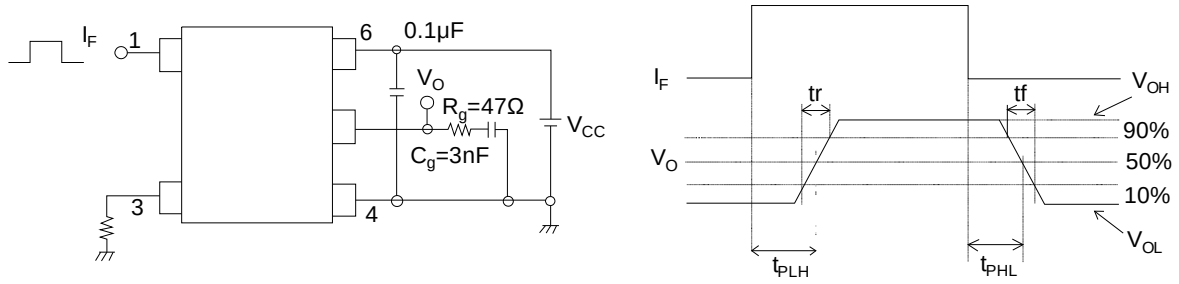

Fig.16: CMTI Test Circuit and Waveform

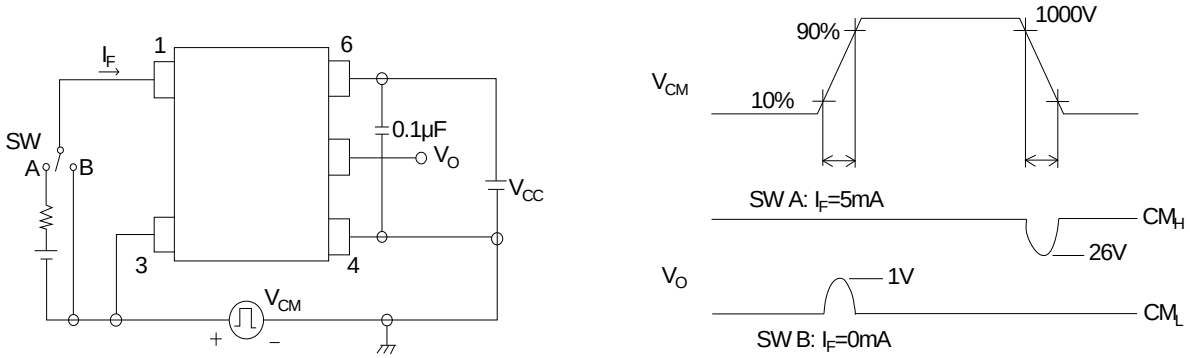

Package Dimension (Unit: mm)

LSOP5

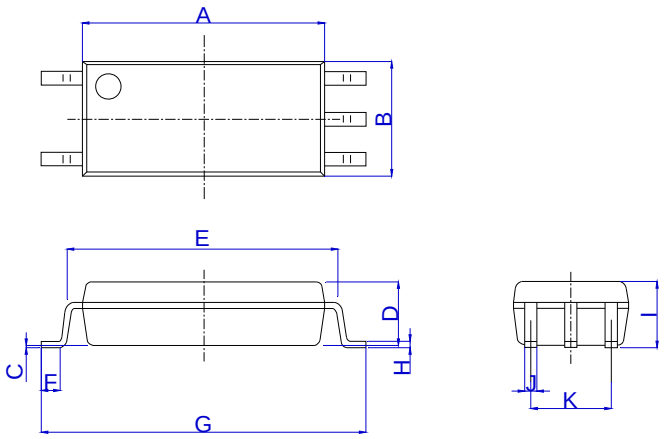

Ref.	Dimensions					
	Millimeters			Inches		
	Min.	Typ.	Max.	Min.	Typ.	Max.
A	7.40		7.80	0.291		0.307
B	3.40		3.80	0.134		0.150
C	0.00		0.20	0.000		0.008
D	1.80		2.20	0.071		0.087
E	8.10		8.70	0.319		0.343
F	0.40		1.00	0.016		0.039
G	9.90		10.50	0.390		0.413
H	0.10		0.30	0.004		0.012
I	1.80		2.40	0.071		0.094
J	0.25		0.55	0.010		0.022
K	2.29		2.79	0.090		0.110

LSOP5W

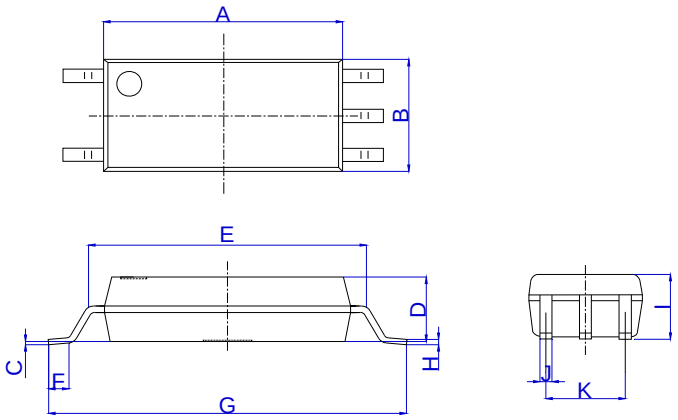

Ref.	Dimensions					
	Millimeters			Inches		
	Min.	Typ.	Max.	Min.	Typ.	Max.
A	7.40		7.80	0.291		0.307
B	3.40		3.80	0.134		0.150
C	0.00		0.20	0.000		0.008
D	1.80		2.20	0.071		0.087
E	8.10		8.70	0.319		0.343
F	0.55		1.15	0.022		0.045
G	10.78		11.38	0.424		0.448
H	0.06		0.26	0.002		0.010
I	1.80		2.40	0.071		0.094
J	0.25		0.55	0.010		0.022
K	2.29		2.79	0.090		0.110

RECOMMENDED SOLDER MASK (Dimensions in mm unless otherwise stated)

LSOP5

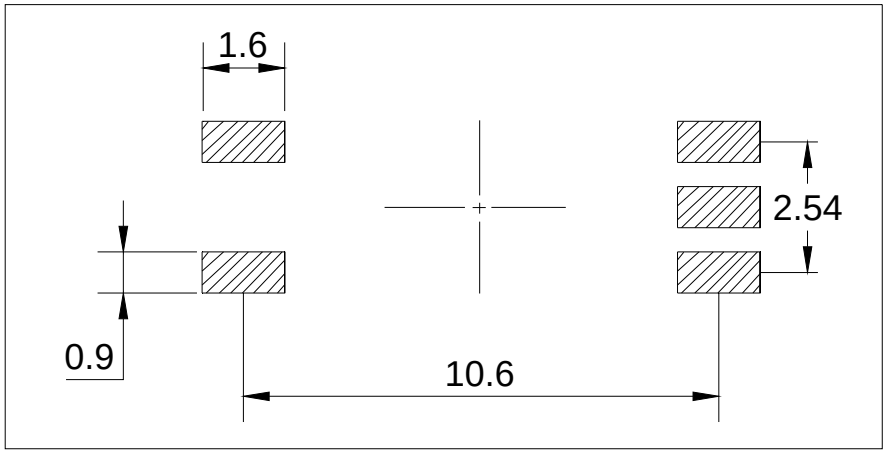

LSOP5W

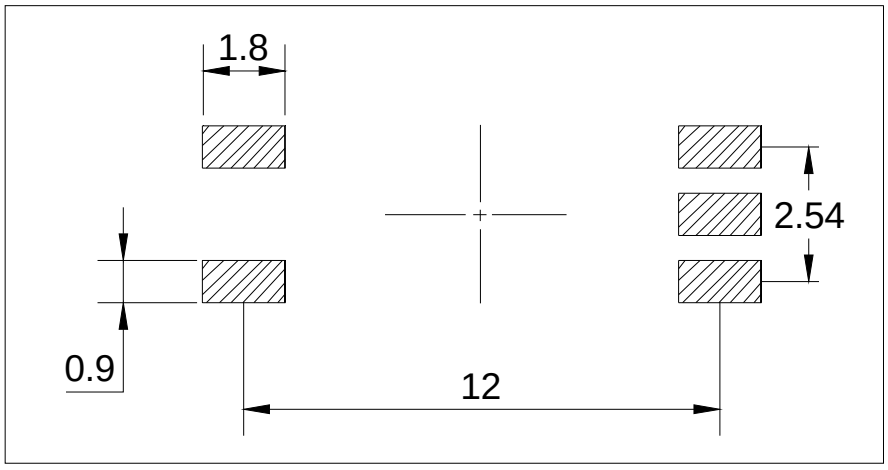

CARRIER TAPE SPECIFICATIONS (Dimensions in mm unless otherwise stated)

Option None

Ref.	Dimensions					
	Millimeters			Inches		
	Min.	Typ.	Max.	Min.	Typ.	Max.
D0			1.60			
P0	3.90					
P1						
E	1.65					
T						

REFLOW INFORMATION

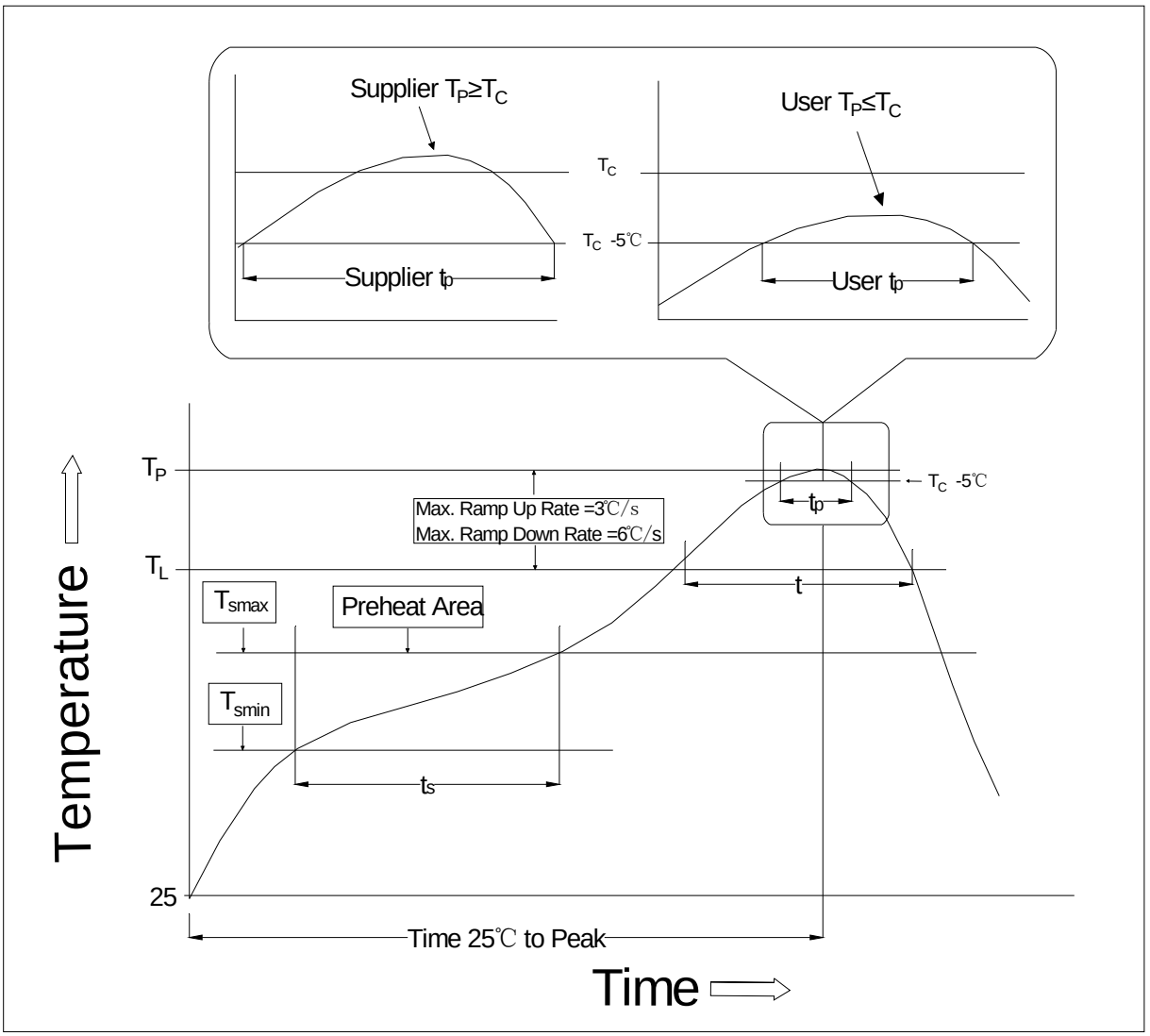

Profile Feature	Sn-Pb Assembly Profile	Pb-Free Assembly Profile
Temperature Min. (Tsmin)	100℃	150℃
Temperature Max. (Tsmax)	150℃	200℃
Time (ts) from (Tsmin to Tsmax)	60-120 seconds	60-120 seconds
Ramp-up Rate (tL to tP)	3℃/second max.	3℃/second max.
Liquidus Temperature (TL)	183℃	217℃
Time (tL) Maintained Above (TL)	60-150 seconds	60-150 seconds
Peak Body Package Temperature	235℃+0℃/-5℃	260℃+0℃/-5℃
Time (tP) within 5℃ of 260℃	10 seconds	10 seconds
Ramp-down Rate (TP to TL)	3-6℃/second	3-6℃/second
Time 25℃ to Peak Temperature	6 minutes max.	8 minutes max.

Note:

1. Reflow soldering is recommended at the temperatures and times shown, no more than three times.

2. Avoid direct contact between the epoxy body and any tools or surfaces exceeding its maximum storage temperature.

3. Application of pressure on the epoxy body is prohibited at elevated temperatures. In specific scenarios, any applied force must not exceed 2.5N.

4. Ensure the component has cooled to ambient temperature before proceeding with any subsequent manufacturing steps.

5. The component has a shelf life of one year when stored under standard conditions.

6. Recommend storage Temp.: 0~40°C;

Recommend storage humidity: <60%;

MSL level: MSL 1

Information furnished in this document is believed to be accurate and reliable. However, Jiangsu JieJie Microelectronics Co., Ltd. assumes no responsibility for the consequences of use without consideration for such information nor use beyond it. Information mentioned in this document is subject to change without notice, apart from that when an agreement is signed, Jiangsu JieJie complies with the agreement.
Products and information provided in this document have no infringement of patents. Jiangsu JieJie assumes no responsibility