	2XWSXW 9ROWDJH	2	9	
	2XWSXW &XUUHQW	,2		
	2XWSXW 3RZHU 'LVVLSDWLRQ	2	3	P:
7RWDO 3RZHU 'LVVLSDWLRQ		3WRW		P:
,VRODWLRQ 9ROWDJH		9LVR	8	9UPV
2SHUDWLQJ 7HPSHUDWXUH		7RSU	a	
-XQFWLRQ 7HPSHUDWXUH		7M		
6WRUDJH 7HPSHUDWXUH		7VWJ	a	
6ROGHULQJ 7HPSHUDWXUH		7VRO		

EKd íìì • ‰µo• U íìì,Ì (Œ ‹µ v Ç
EKd î (}Œ íu]vµš U ZX,XAðì•òì9

> dZ/ > , Z d Z/^d/^ 7HPSHUDWXUH ƒ&

3DUDPHWHU			6\PERO	&RQGLWLRQ			0LQ 7
,QSXW	)RUZDUG 9ROWDJH	)	,) 9 P$				9
	5HYHUVH &XUUHQW	5	95 , 9				$
	,QSXW &DSDFLWDQFH	LQ	9 I&0+]				S)
2XWSXW	&XUUHQW WUDQVIHU UDWLR	&75	,) P$ &&9 9 92 9				
	+LJK /HYHO &XUUHQW	KYµš‰µš ,2+	,) P$ &&9 9 92 9				Q$
			,) P$ &&9 9 92 9				$
	/RZ /HYHO 6XSSO\ &XUUHQW	,&&/	92 2SHQ 9&& 9 ,) PH$ $#l• cH '3Ð 9				P$
	+LJK /HYHO 6XSSO\ &XUUHQW	,&&+					

	3URSDJDWLRQ 'HOD\ 7LPH WR /RJLF +LJK	73/+	) P$ 5/ N 9&& 9				V

&RPPRQ 0RGH
7UDQVLHQW
0 `t= 7 3&)&3&
7UDQVLHQW
0 `t= 7 3&

KZ Z/E' /E&KZD d/KE

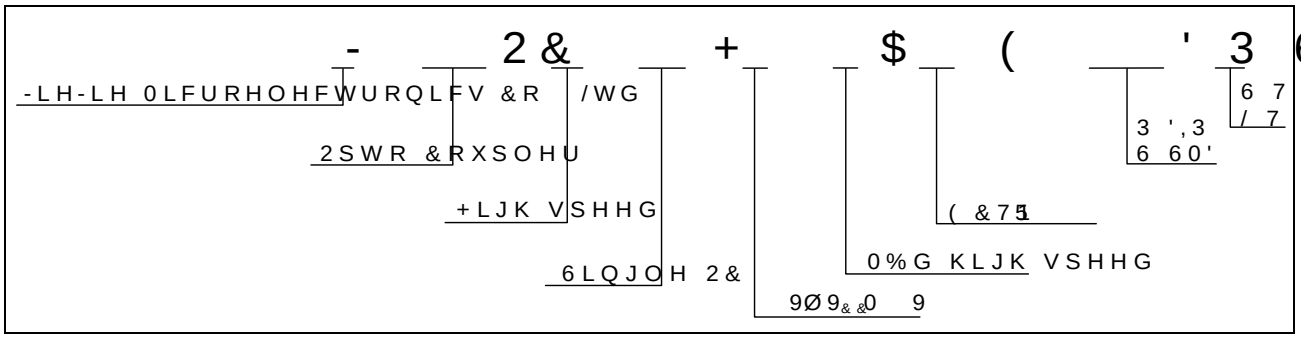

W l]vP Yµ vš]šÇ				
K‰š]}v	Yµ vš]šÇ	Yµ vš]šÇ t /vv Œ }Æ		Yµ vš]
/W	ñì hv]š•ldµ	ðì d}µÆ	•l/ñv/vŒv Œ }Æ lKµš vŒš•}Æ	A
^D	íîìì hv]š•lZ o	î Z}Æ6•l/vñ Œv v Œ }Æ lKlµš vŒš•}Æ		A

D Z</E'

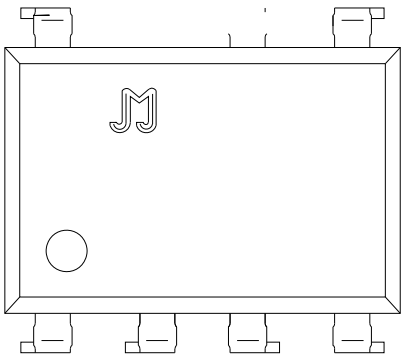

Z Œ š Œ]•š] • µŒÀ •

),*)RUZDUG &XUUHQW YV)RUZDUG 9ROWDJH 7HPSHUDWXUH

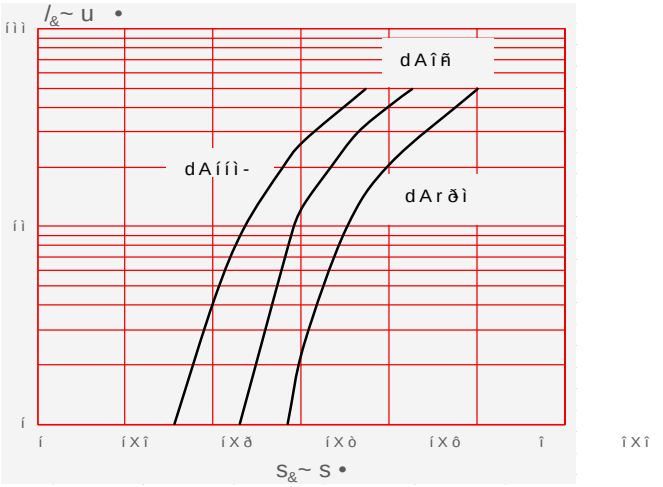

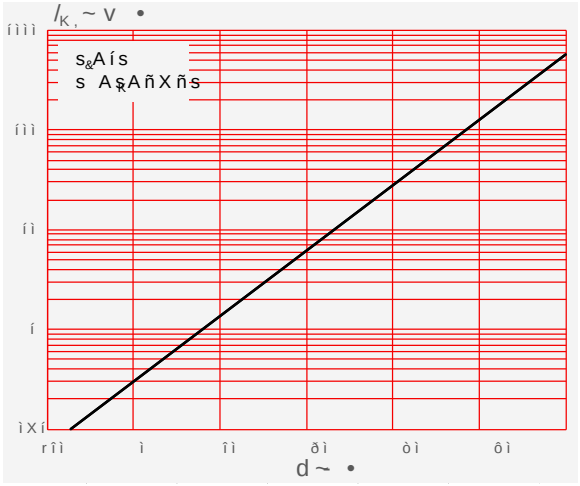

),* 2XWSXW &XUUHQW YV)RUZDUG &XUUHQW 7UDQV

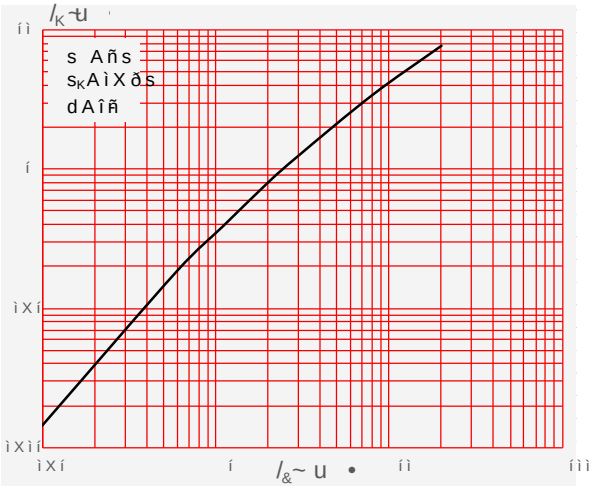

),* 1RUPDOL]HG &XUUHQW YV)RUZDUG &XUUHQW 7UDQV

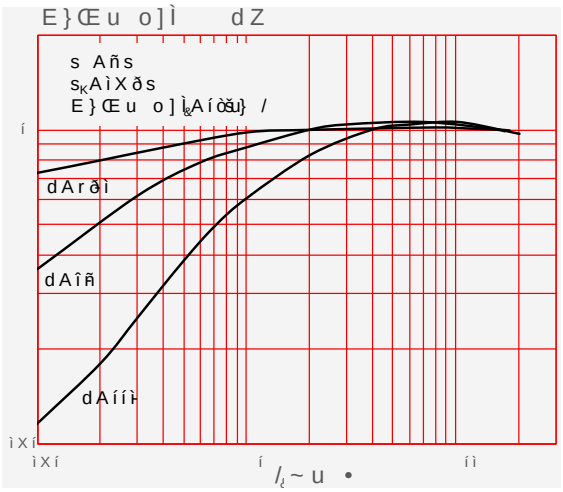

),* 1RUPDOL]HG &XUUHQW 7UDQVIHU &KDUDFWHULVWLFV 2XWSXW &XUUHQW YV 2XWSX

$PELHQW 7HPSHUDWXUH

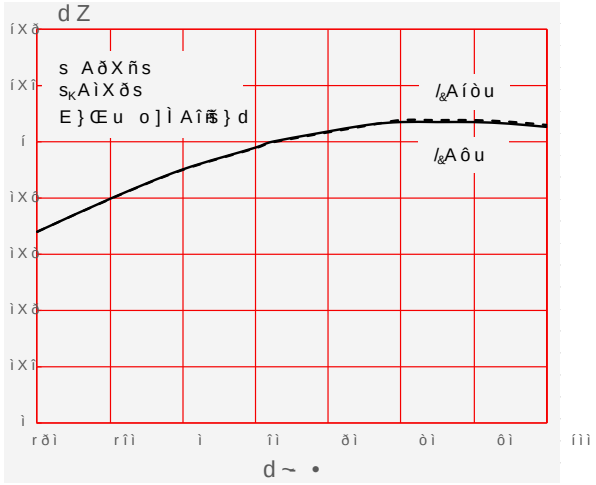

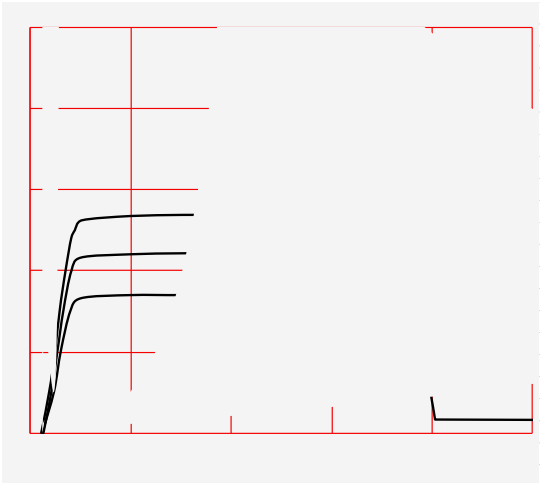

),* /RZ /HYHO 2XWSXWYRO$PELHQW,* 3URSDJDWLRQ 'HOD\ YV /RDG
7HPSHUDWXUH 5HVLVWDQFH

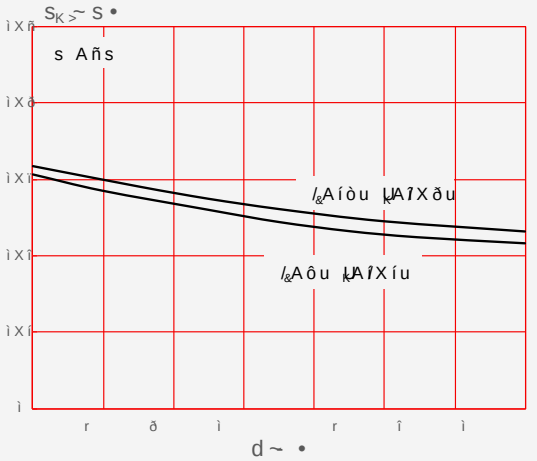

d ^d /Z h/d^

)LJ 6ZLWFKLQJ 7LPH 7HVW &LUFXLW DQG :DYHIRUP

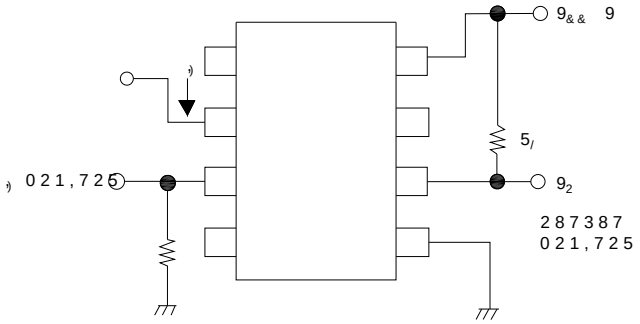

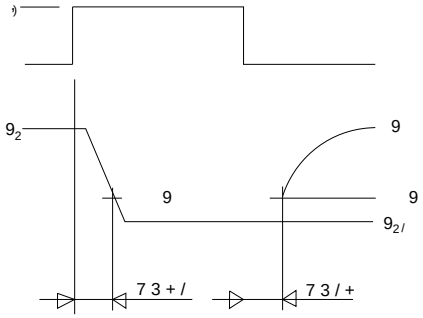

)LJ &07, 7HVW &LUFXLW DQG :DYHIRUP

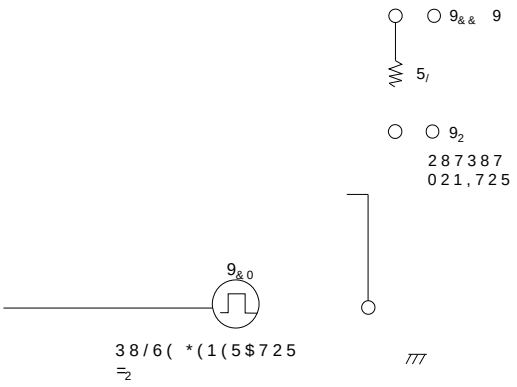

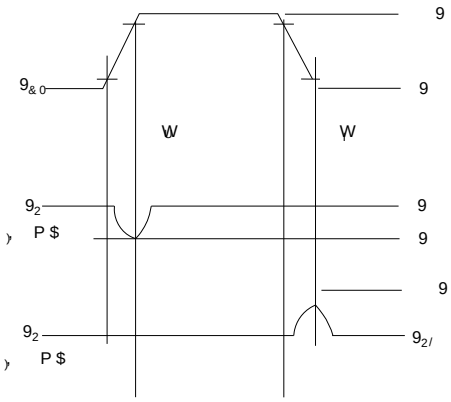

W l P]u v•]}v ~hv]šW uu•

6WDQGDUG ',3 7\SH

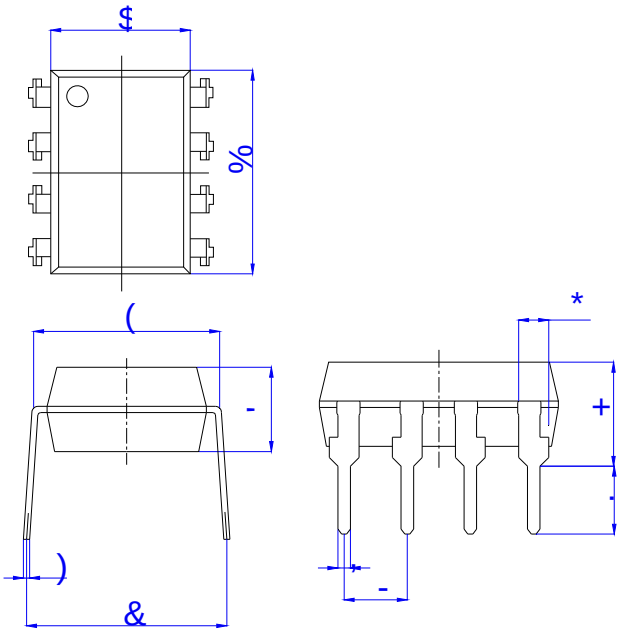

5HI	'LPHQVLRQV					
	0LOOLPHWHUV ,QFKHV					
	0LQ	7\S	0D[	0LQ	7\S	0D[
$						
%						
&						
'						
(						
)						
*						
+						
,						
-						
.						

2SWLRQ 60' 7\SH

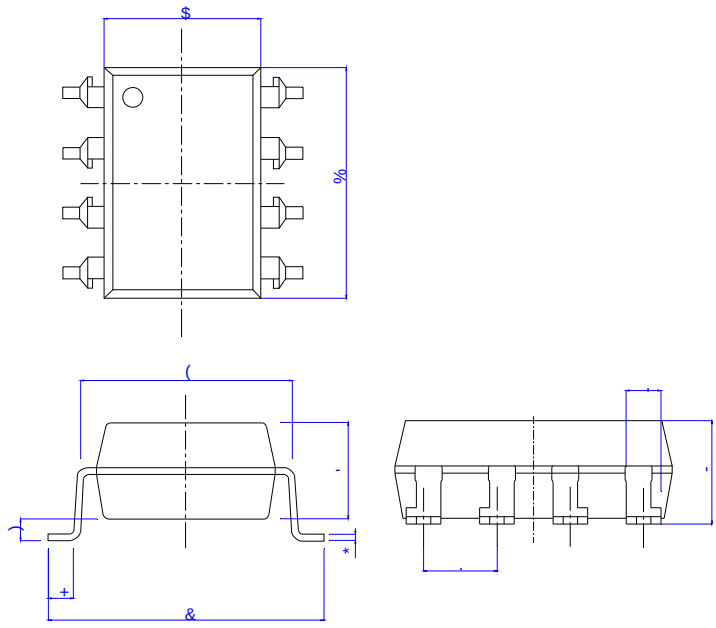

5HI	'LPHQVLRQV					
	0LOOLPHWHUV ,QFKHV					
	0LQ	7\S	0D[	0LQ	7\S	0D[
$						
%						
&						
'						
(						
)						
*						
+						
,						
-						
.						

Z KDD E ^K> Z D ^< ~]u v•]}v•]v uu µvo •• }šZ Œ

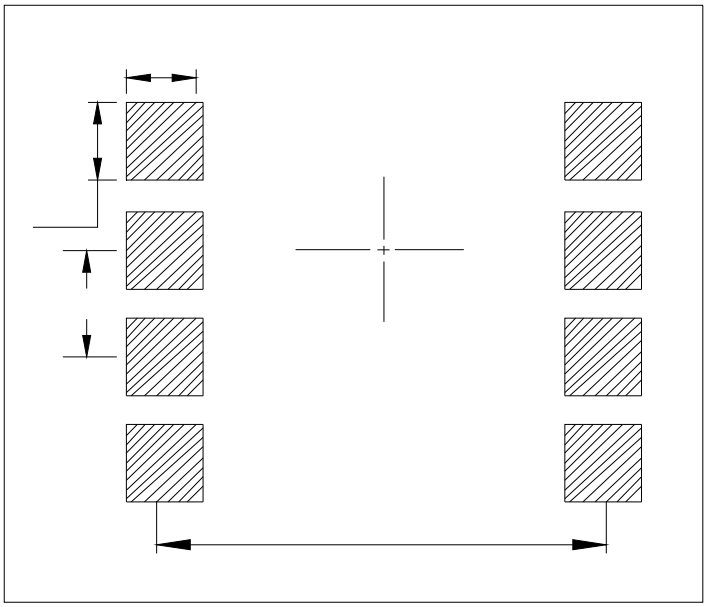

dh ^W /&/ d/KE^ ~]u v•]}v•]v uu µvo •• }šZ ŒÁ]•

6WDQGDUG ',3

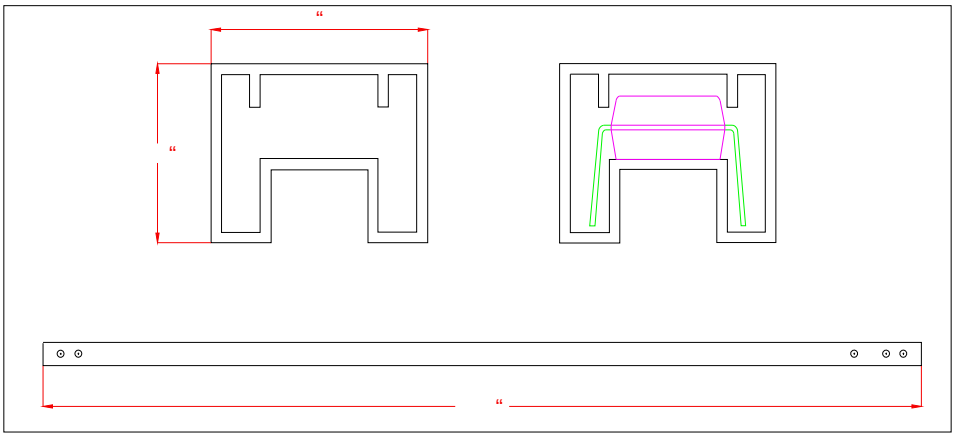

ZZ/ Z d W ^W /&/ d/•]E^]v]uu µvo •••ššZ ŒÁ]•

2SWLRQ 6

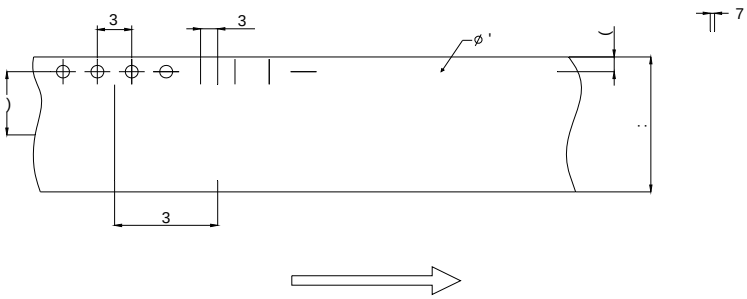

5HI	'LPHQVLRQV					
	0LOOLPHWHUV			,QFKHV		
	0LQ	7\S	0D[	0LQ	7\S	0D[
'						
3						
3						
3						
(						
)						
7						
:						

Z &>Kt /E&KZD d/KE

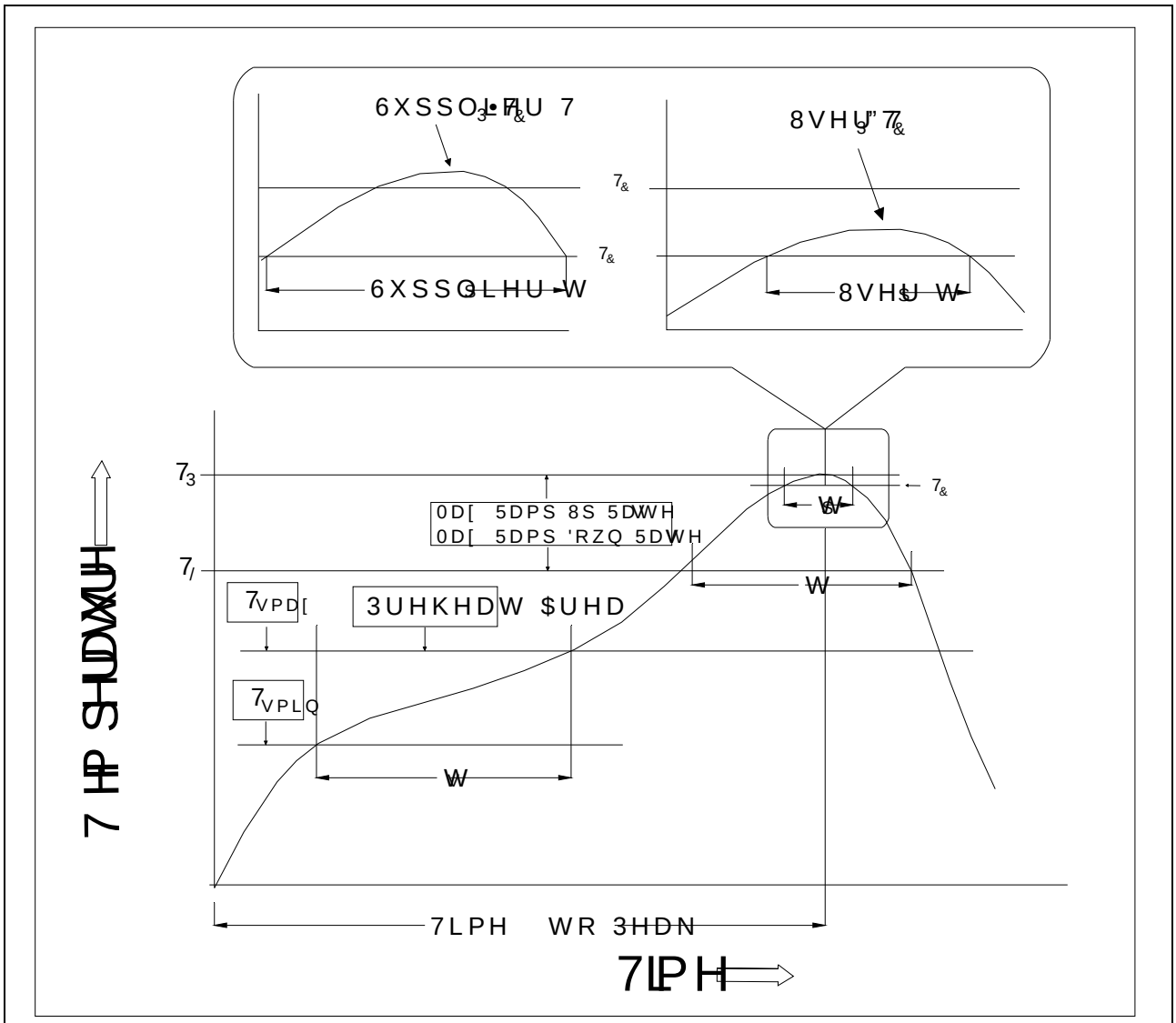

3URILOH)HDWXUH	3E $VVHPEO\	3URILOH 3E)UHH $VVH
7HPSHUDWXUH 0LQ	7VPLQ	
7HPSHUDWXUH 0D[	7VPD[	
7LPH WV IURP 7VPLQ WR 7VPD[		VHFRQGV
5DPS XS 5DWH W/ WR W3HDN		VHFRQG PD[
/LTXLGXV 7HPSHUDWXUH 7/		
7LPH W/ 0DLQWDLQHG $ERYH 7/		VHFRQGV
3HDN %RG\ 3DFNDJH 7HPSHUDWXUH		
7LPH W3 ZLWKLQ	VHFRQGV	VHFRQGV
5DPS GRZQ 5DWH	73 WR 7/ VHFRQG	VHFRQG
7LPH WR 3HDN 7HPSHUDWXUH		PLQXWHV PD[

t s ^K> Z/E'

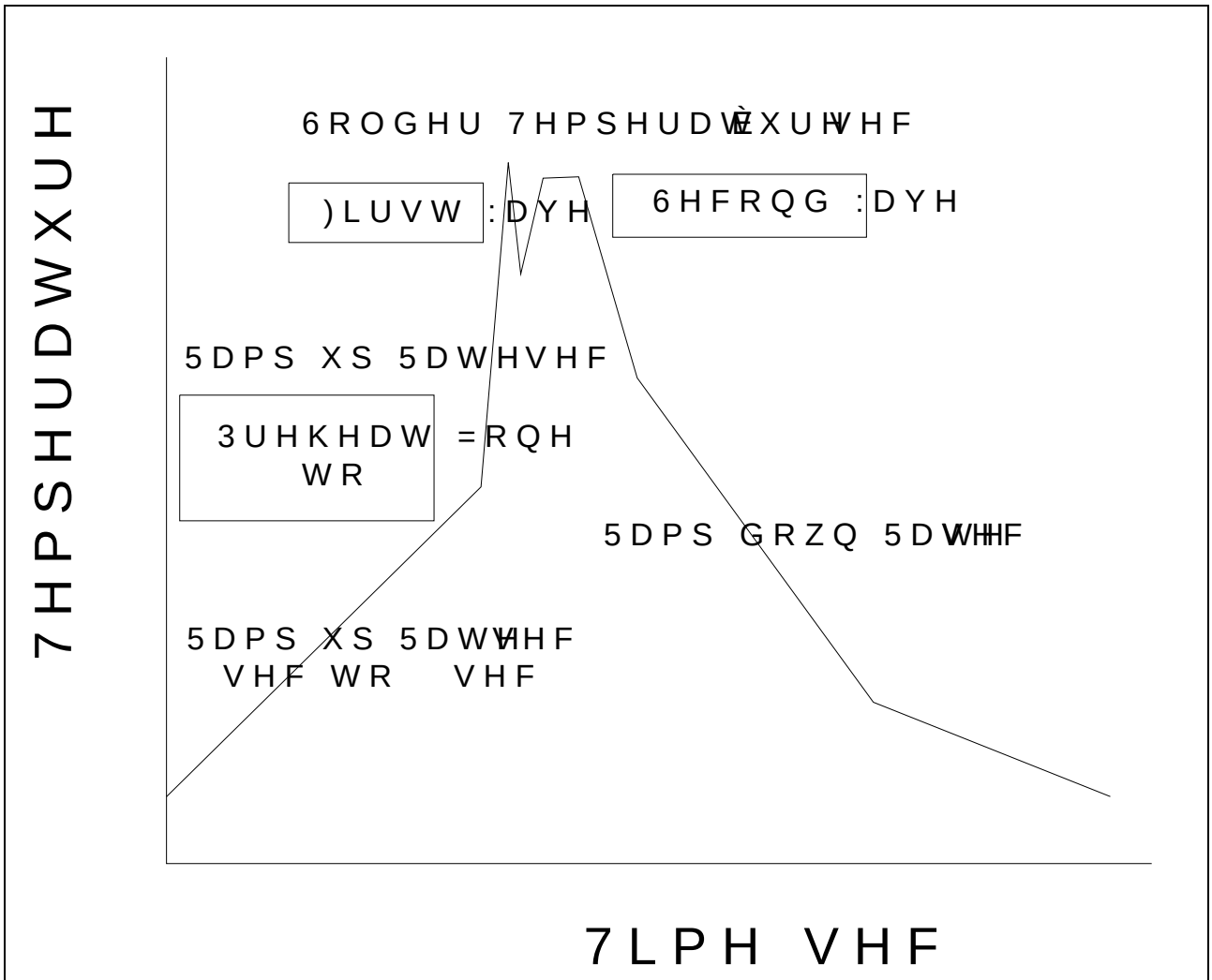

, E ^K> Z/E' z ^K> Z/E' /ZKE	
6ROGHULQJ 7HPSHUDWXUH	f
6ROGHULQJ 7LPH	V PD[

1 R W H