2XWSXW	6XSSO\ 9ROWDJH	&&	9	
	2XWSXW 9ROWDJH	92		
	2XWSXW &XUUHQW	,2		
	2XWSXW 3RZHU 'LVVLSDWLRQ	3		P:
7RWDO 3RZHU 'LVVLSDWLRQ		3WRW		P:
,VRODWLRQ 9ROWDJH		9LVR	8	9UPV
2SHUDWLQJ 7HPSHUDWXUH		7RSU	a	
-XQFWLRQ 7HPSHUDWXUH		7M		
6WRUDJH 7HPSHUDWXUH		7VWJ	a	
6ROGHULQJ 7HPSHUDWXUH		7VRO		

íìì • ‰µo• U íìì,Ì (Œ ‹µ v Ç
(}Œ íu]vµš U ZX,XAðì•òì9

7HPSHUDWXUH ƒ&

Parameter		Symbol	Condition	Min.	Typ.	Max.	Unit
,QSXW	)RUZDUG 9ROWDJH		,) 9 P$				9
	5HYHUVH &XUUHQW	5	95 , 9				$
	,QSXW &DSDFLWDQFH	LD	9 I&0+]				S)
2XWSXW	&XUUHQW WUDQVIHU UDWLR	&75	P$ && 9 92 9				
	+LJK /HYHO %ŠYµ‰šµš &XUUHQW	,2+	,) P$ && 9 92 9				Q$
			,) P$ && 9 92 9				$
	/RZ /HYHO 6XSSO\ &XUUHQW	,&&/	92 2SHQ 9&& 9 ,) P$				P$
	+LJK /HYHO 6XSSO\ &XUUHQW	,&&+	92 2SHQ 9&& 9 ,) P$				$
	/RJLF /RZ 2XWSXW 9ROWDJH	92/	,) P$ 2, P$ 9&& 9				9
	,VRODWLRQ 5HVLVWDQFH	5,62	'& 9 a 5 +				
	)ORDWLQJ &DSDFLWDQFH	&,2	9 I 0+]				S)
6ZLWFKLQJ &KDUDFWHULVWLFV	3URSDJDWLRQ 'HOD\ 7XUQRQ 7LPH 7XUQRII 7LPH /RJLF /RZ	73+/	,) P$ 5/ N 9&& 9				V

	3URSDJDWLRQ 'HOD\ 7LPH WR /RJLF +LJK &RPPRQ 0RGH 7UDQVLHQW	73/+	) 5/ 9&&	P$ N 9			V

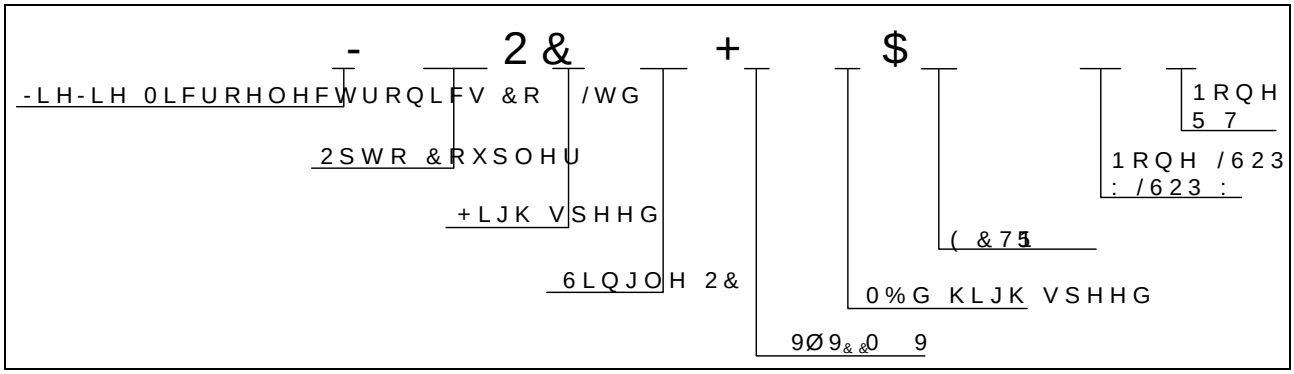

>^KWñ	ïìì hv]š•lZ o	î Z	o•l/vv Œ }Æ ïìlñ h/w]vš•Œ }A

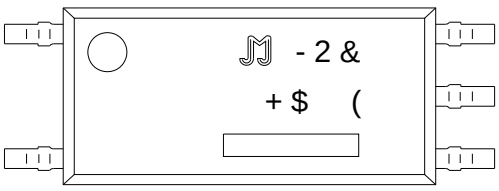

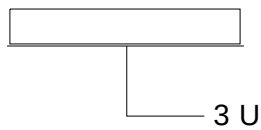

FIG.1:)RUZDUG &XUUHQW YV)RUZDUG 9ROWDJH

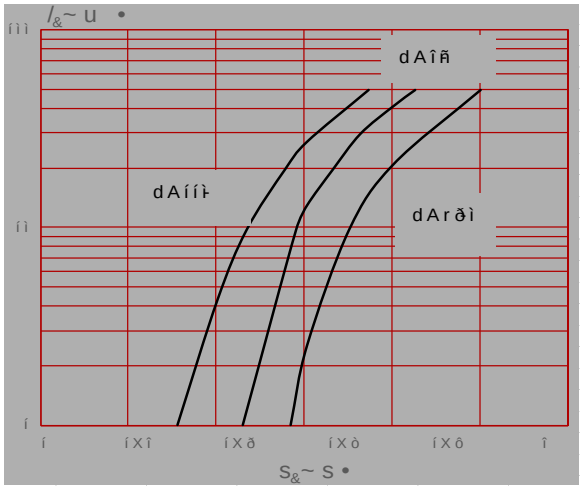

FIG.2: 9ROWDJH 2XWSXW &XUUHQW YV 7HPSHUDWXUH

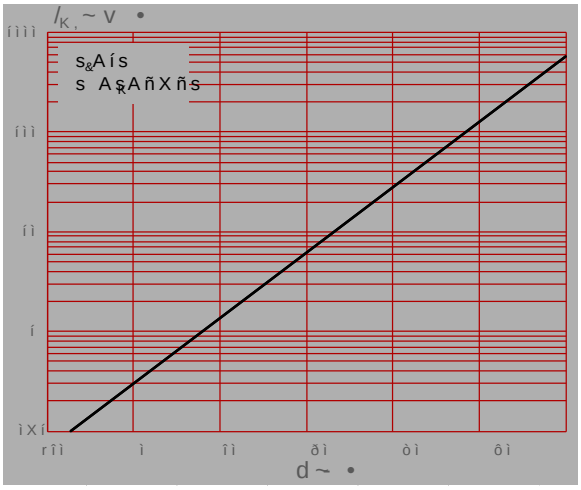

FIG.3: 2XWSXW &XUUHQW YV)RUZDUG &XUUHQW

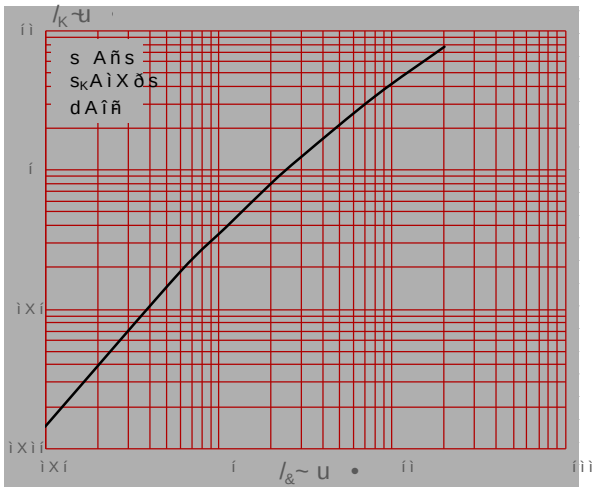

FIG.4: 1RUPDOL]HG &XUUHQW 7UDQVIHU &KDUDFWHULVWLFV YV)RUZDUG &XUUHQW

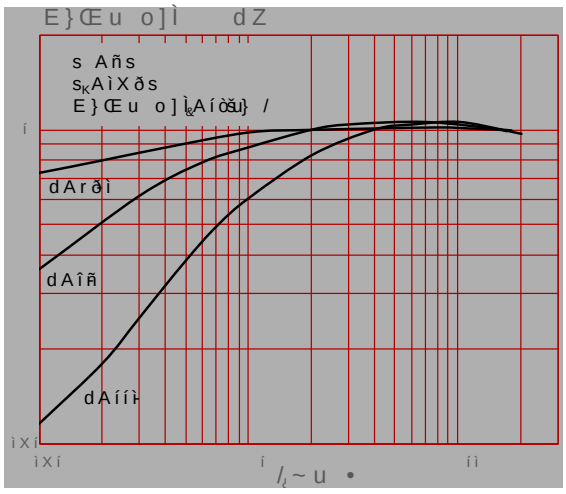

FIG.5: 1RUPDOL]HG &XUUHQW 7UDQVIHU &KDUDFWHULVWLFV YV $PELHQW 7HPSHUDWXUH

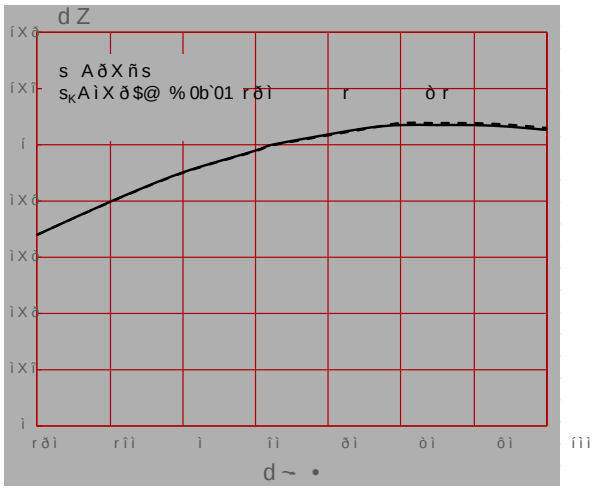

FIG.6: 2XWSXW &XUUHQW YV 2XWSXW 9ROWDJH

FIG.7: /RZ /HYHO 2XWSXW9ROWDJH9V$PELHQW7HPSHUDWXUH

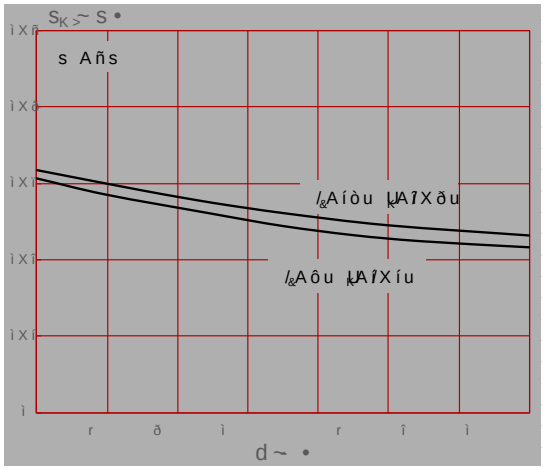

FIG.8: 3URSDJDWLRQ 'HOD\ YV /RDG5HVLVWDQFH

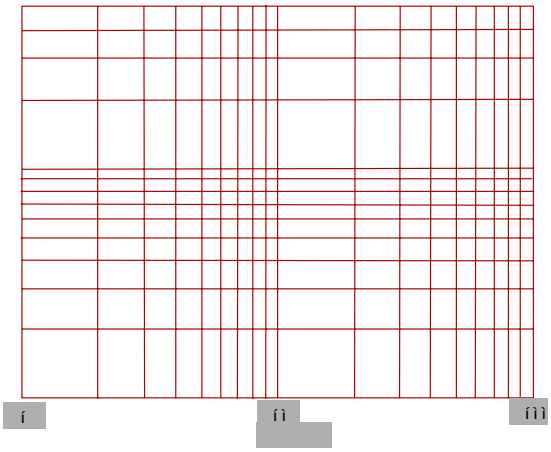

Fig.10: Switching Time Test Circuit and Waveform

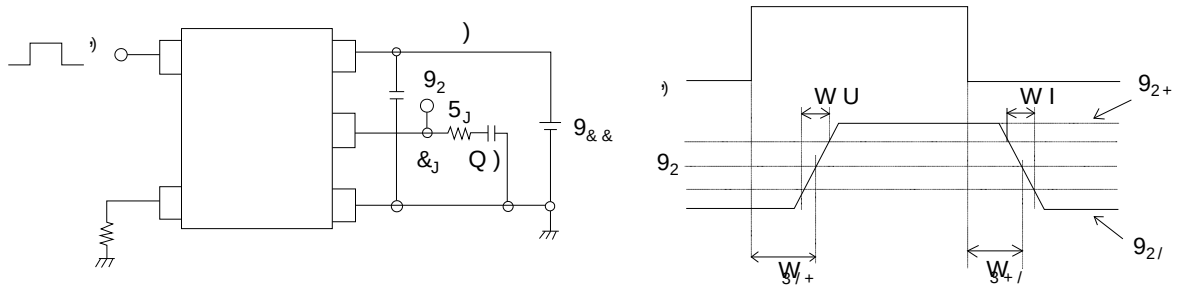

Fig.11: CMTI Test Circuit and Waveform

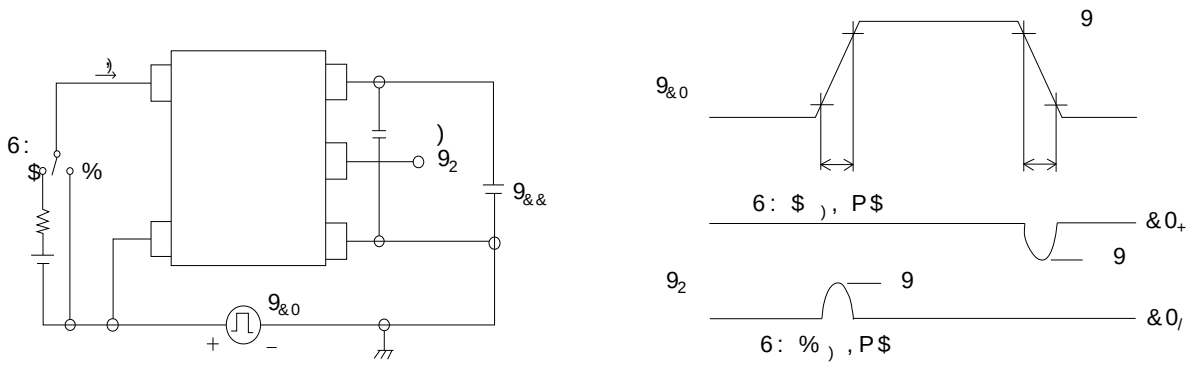

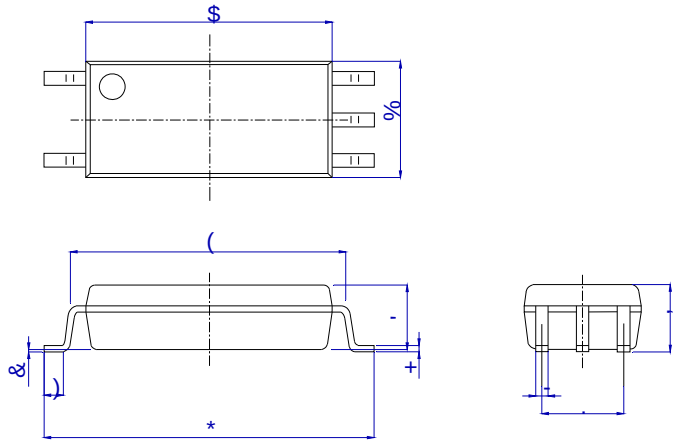

5HI	'LPHQVLRQV					
	0LOOLPHWHUV			,QFKHV		
	0LQ	7\S	0D[	0LQ	7\S	0D[
$						
%						
&						
'						
(						
)						
*						
+						
,						
-						
.						

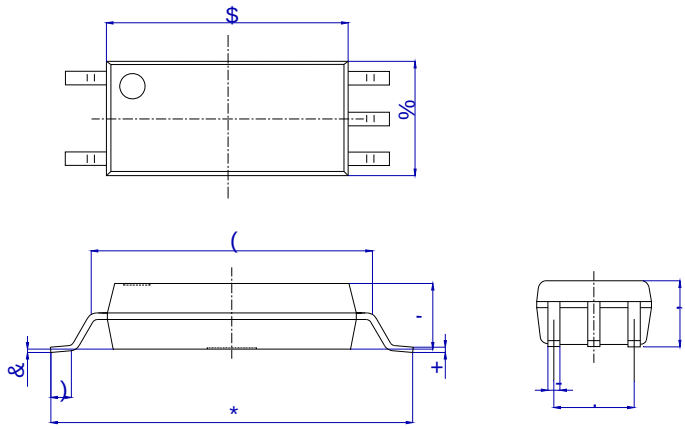

5HI	'LPHQVLRQV					
	0LOOLPHWHUV			,QFKHV		
	0LQ	7\S	0D[	0LQ	7\S	0D[
$						
%						
&						
'						
(						
)						
*						
+						
,						
-						
.						

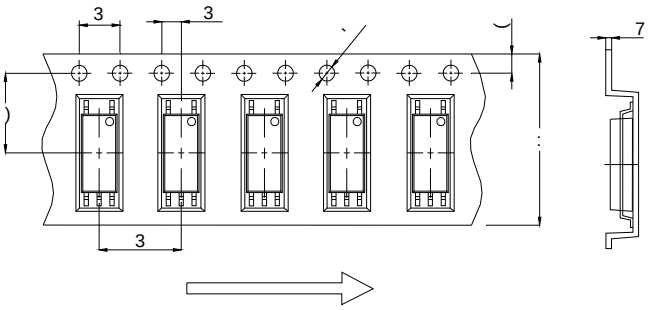

5HI	'LPHQVLRQV					
	0LOOLPHWHUV			,QFKHV		
	0LQ	7\S	0D[	0LQ	7\S	0D[
'						
3						
3						
3						
(						
)						
7						
:						

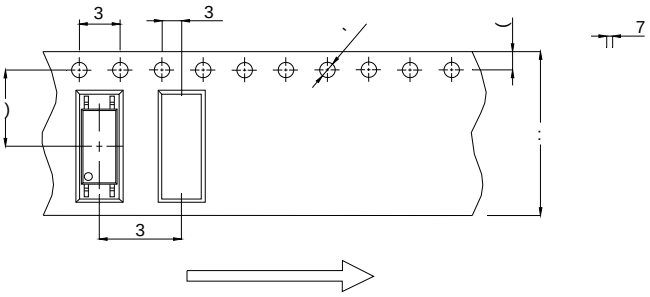

5HI	'LPHQVLRQV					
	0LOOLPHWHUV			,QFKHV		
	0LQ	7\S	0D[	0LQ	7\S	0D[
'						
3						
3						
3						
(						
)						
7						
:						

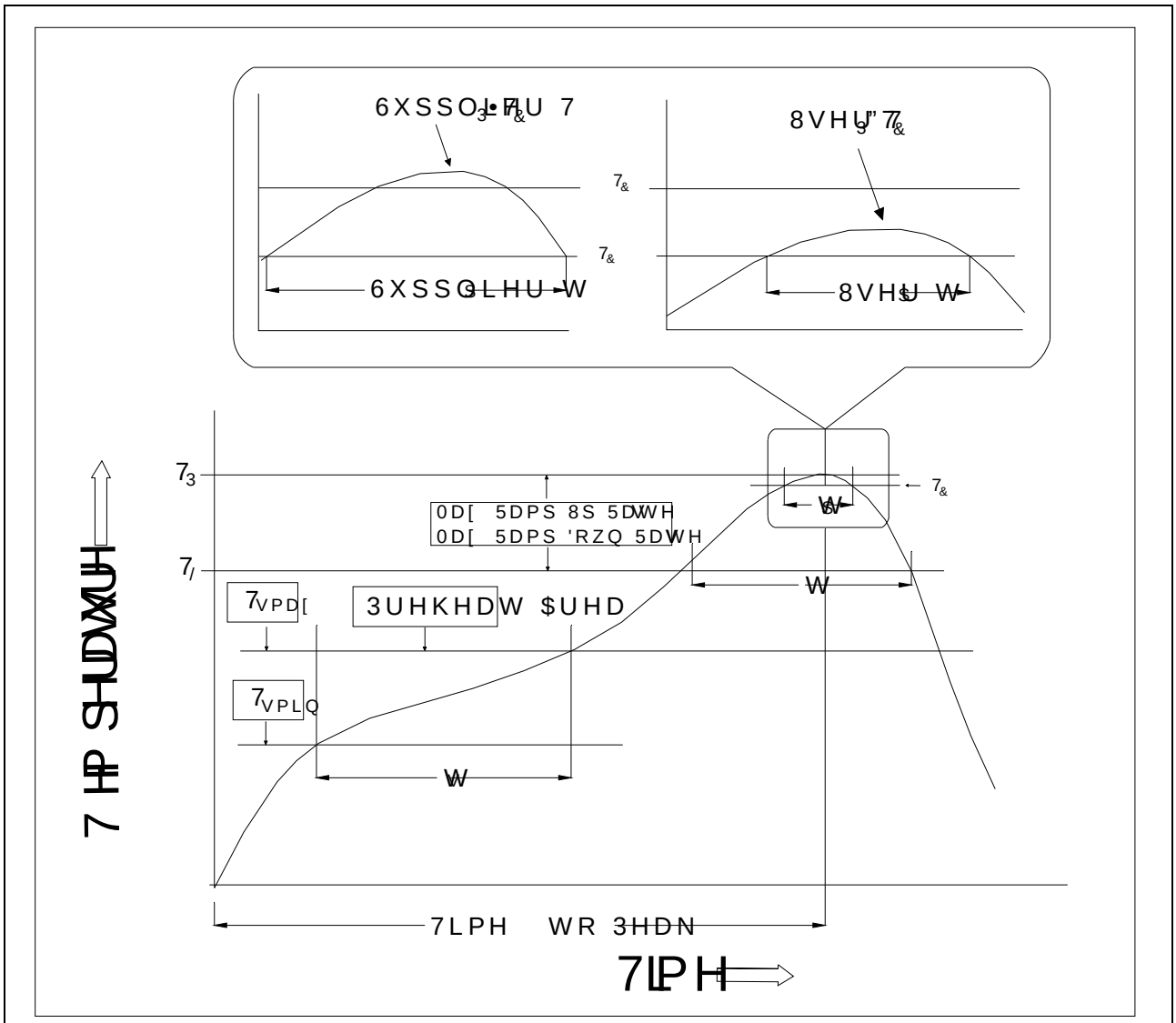

Profile Feature	Sn-Pb Assembly Profile	Pb-Free Assembly Profile
7HPSHUDWXUH 0LQ	7VPLQ	
7HPSHUDWXUH 0D[	7VPD[	
7LPH WV IURP 7VPLQ WR 7VPD[	VHFRQGV	VHFRQGV
5DPS XS 5DWH W/ WR W3HDN	VHFRQG PD[	VHFRQG PD[
/LTXLGXV 7HPSHUDWXUH 7/		
7LPH W/ 0DLQWDLQHG $ERYH 7/	VHFRQGV	VHFRQGV
3HDN %RG\ 3DFNDJH	7HPSHUDWXUH	
7LPH W3 ZLWKLQ	VHFRQGV	VHFRQGV
5DPS GRZQ 5DWH	73 WR 7/ VHFRQG	VHFRQG
7LPH WR 3HDN 7HPSHUDWXUH	PLQXWHV PD[	PLQXWHV PD[

1RWH

5HIORZ VROGHULQJ LV UHFRPPHQGHG DVWKRZLQH QVRHPSRHUHDWWKDQHWKH

$YRLG GLUHFW FRQWDFW VRPHWDFSVRE[HQGZHQWRXRLDFRHV H[FHHGLQJ LWV PD
VWRUDJH WHPSHUDWXUH

$SSOLFDWLRQ RKHSUHSRV\XERGRKQLWLSOHGDWHGWHPSHUDWXUHV ,Q V
VFHQDULRV DQWHDPSXOWLHQGRWRH[FHHG 1

(QVXUH WKH FRPSRQHQW KDV FRROHGWSRRDFHEWKQQQZLXSVHUDXHQ
PDQXIDFWXULQJ VWHSV

7KH FRPSRQHQW HKDV BQVHKHOLZKHQVWRGHGXQGHUGLWLRQV

5HFRPPHQG VWRUDJH 7HPS a f&

5HFRPPHQG VWRUDJH KXPLGLW\

06/ OHYHO 06/

,QIRUPDWLRQ IXUQXVKHG LQ WKLV GRFXPHQW LV EHOLHYHG WR EH DFFXUDWH
-LDQJVX -LH-LH 0LFURRHOHFWDVRQLFVCQLPLWHRVSRQVLEOHIRQVH
RI XVH ZLWKRXW FRQVLGHUDWLRQ IRU LWFK,QIRUPDWLRQ RU
LQ WKLV GRFXPHQWKDLQJHXZHLWHKFRXWRQRWLFH DSDUW IURP V
VLJQHG -LDQJVX-LHVLZHLPRKPWKH DJUHHPHQW
3URGXFWV DQG LQIRUPDWLRQ SURYLGHGQJLQHPHQWVRGSFDXP
-LDQJVX -LH-LH DVVXPEHVOQRWUROSRQ\VLQIULQJHPHQW RI RW
ZKLFK PD\ UHVXOW IURP WKH XVH RI V7XKLV SURFXPHQW DQGSH
DQG UHSODFHV DOO LQIRUPDWLRQ SUHYLRXVO\ VXSSOLHG
LV D UHJLVWHUHGDQJUDG-HLHD UHN RLF-UR HOWHFWURQLFV &R
&RS\ULJKW -LDQJVX -LH-LH OFLF&RHO/HFWURQLGLJKWV UHVH