JOCHA21X-D8P/S Series

Rev.A.1.0

DESCRIPTION:

The products are 1MBd high-speed opto-couplers. The device is a small-outline coupler suitable for surface-mount assembly. It consists of a high-output-power infrared LED optically coupled to a high-speed photodiode-transistor chip. It is housed in a plastic DIP8 package with different lead forming options package and guarantees a creepage distance of ≥5 mm, a clearance of ≥5 mm and an insulation thickness of ≥0.4 mm. Therefore, it meets the reinforced insulation class requirements of international safety standards. The products are widely used in programmable controllers, industrial inverters and switching power supplies.



JOCHA21X-D8P

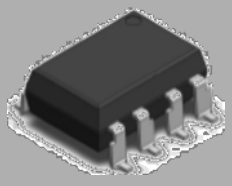

JOCHA21X-D8S

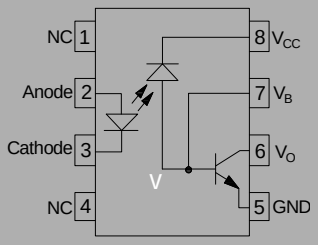

MAIN FEATURES

High isolation 5000 VRMS
High speed – 1MBd typical
Operating temperature range -40°C to 110°C
REACH & RoHS compliance
HBM: H3A; MM: M4; CDM: C3
CQC approved
VDE approved
UL approved

Truth Table

LED	Output
ON	L
OFF	H

ABSOLUTE MAXIMUM RATINGS (Temperature=25°C)

Parameter		Symbol	Value	Unit
Input	Forward Current	I_F	50	mA
	Peak Forward Current	I_{FP}	1	A
	Reverse Voltage	V_R	6	V
	Input Power Dissipation	P_D	100	mW

Output	Supply Voltage	V_{CC}	35	V
	Output Voltage	V_O	20	V
	Output Current	I_O	8	mA
	Output Power Dissipation	P_O	100	mW
Total Power Dissipation		P_{tot}	200	mW
Isolation Voltage		V_{iso}	5000	Vrms
Operating Temperature		T_{opr}	-40~110	
Junction Temperature		T_j	125	
Storage Temperature		T_{stg}	-55~125	
Soldering Temperature		T_{sol}	260	

NOTE1: 100μs pulse, 100Hz frequency
NOTE2: AC for 1minute, R.H.=40~60%

ELECTRICAL CHARACTERISTICS (Temperature=25°C)

Parameter		Symbol		Condition	Min.	Typ.	Max.	Unit
Input	Forward Voltage	V_F		I_F=10mA	-	1.35	1.6	V
	Reverse Current	I_R		V_R=6V	-	-	1	μA
	Input Capacitance	C_{in}		V=0, f=1MHz	-	60	-	pF
Output	Current transfer ratio	CTR	A	I_F=16mA, V_{CC}=4.5V, V_O=0.4V	-	-	20	%
			B		20	-	60	
			C		60	-	120	
	High Level Output Current	I_{OH}		I_F=0mA, V_{CC}=5.5V, V_O=5.5V	-	3	500	nA
				I_F=0mA, V_{CC}=15V, V_O=15V	-	-	50	μA
	Low Level Supply Current	I_{CCL}		V_O=Open, V_{CC}=15V, I_F=16mA	-	0.5	0.8	mA
	High Level Supply Current	I_{CCH}		V_O=Open, V_{CC}=15V, I_F=0mA	-	0.01	2	μA
	Logic Low Output Voltage	V_{OL}		I_F=16mA, I_O=2.4mA, V_{CC}=4.5V	-	-	0.4	V
	Isolation Resistance	R_{ISO}		DC500V 40~60%R.H.	10^{12}	10^{14}	-	Ω
	Floating Capacitance	C_{IO}		V=0, f=1MHz	-	0.8	-	pF

Switching Characteristics	Propagation Delay Time to Logic Low	TPHL	I_F=0→16mA, R_L=1.9kΩ, V_{CC}=5V	-	-	0.8	μs
	Propagation Delay Time to Logic High	TPLH	I_F=16→0mA, R_L=1.9kΩ, V_{CC}=5V	-	-	0.8	μs
	Common Mode Transient Immunity at Logic High	CM_H	I_F=0mA, V_{CM}=400Vpp, R_L=4.1kΩ	15	20	-	kV/μs
	Common Mode Transient Immunity at Logic Low	CM_L	I_F=16mA, V_{CM}=400Vpp, R_L=4.1kΩ	-15	-20	-	kV/μs

ORDERING INFORMATION

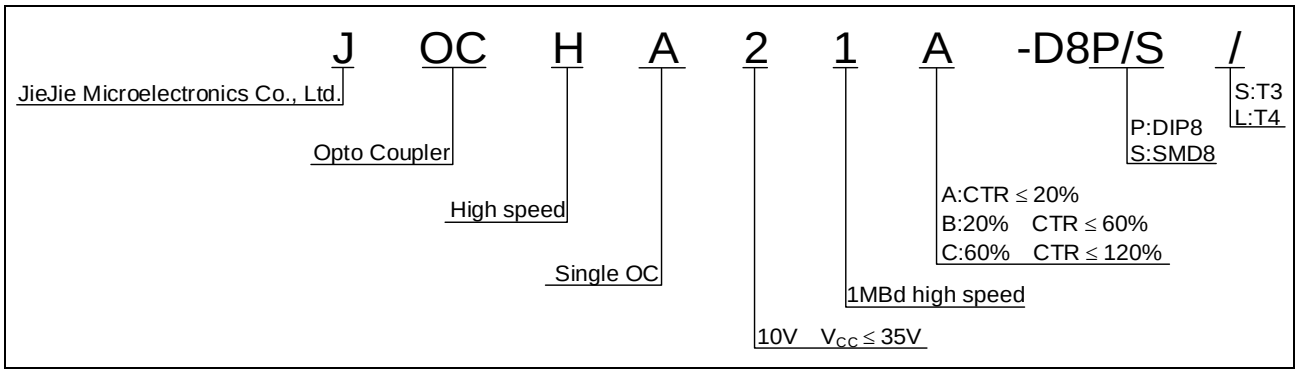

Packing Quantity			
Option	**Quantity**	**Quantity – Inner box**	**Quantity –Outer box**
DIP	50 Units/Tube	40 Tubes/Inner box	5 Inner box/Outer box =10k Units
SMD	1200 Units/Reel	2 Reels/Inner box	5 Inner box/Outer box =12k Units

MARKING

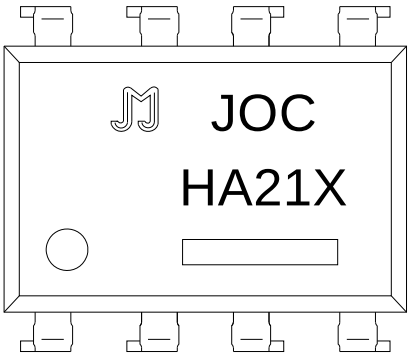

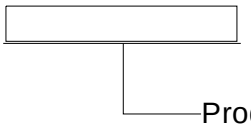

Characteristics Curves

FIG.1: Forward Current vs. Forward Voltage

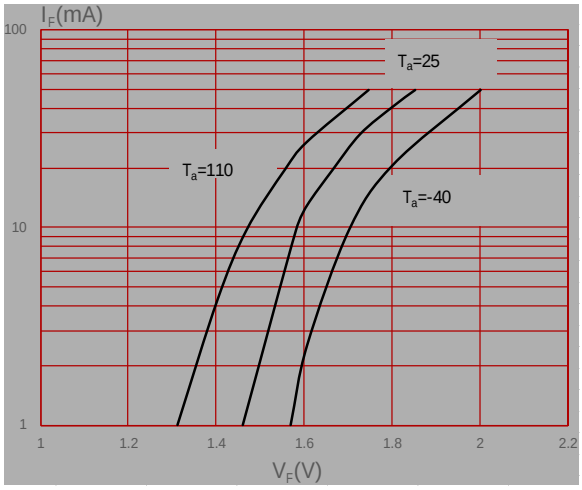

FIG.2: High Level Output Current vs. Ambient Temperature

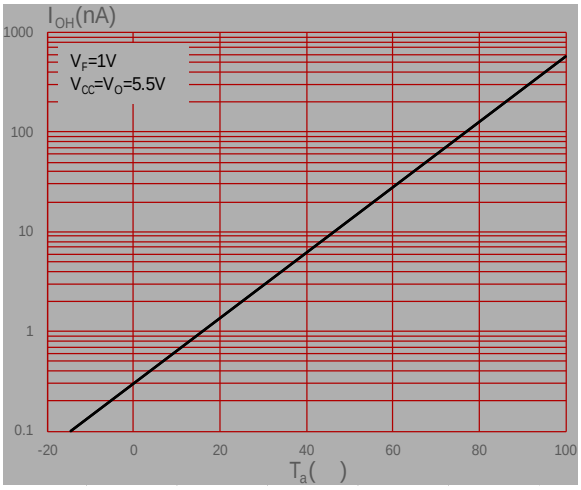

FIG.3: Output Current vs. Forward Current

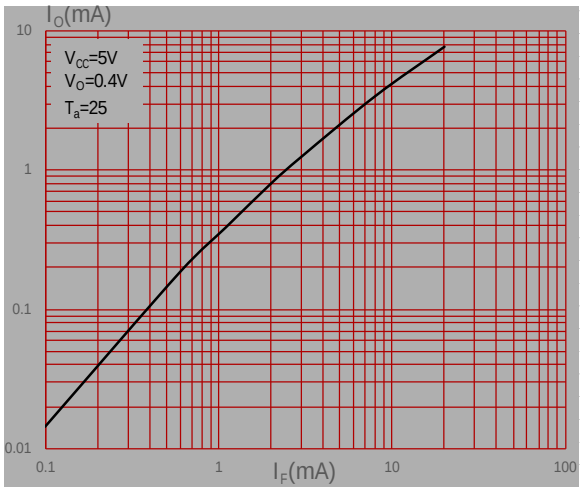

FIG.4: Normalized Current Transfer Ratio vs. Forward Current

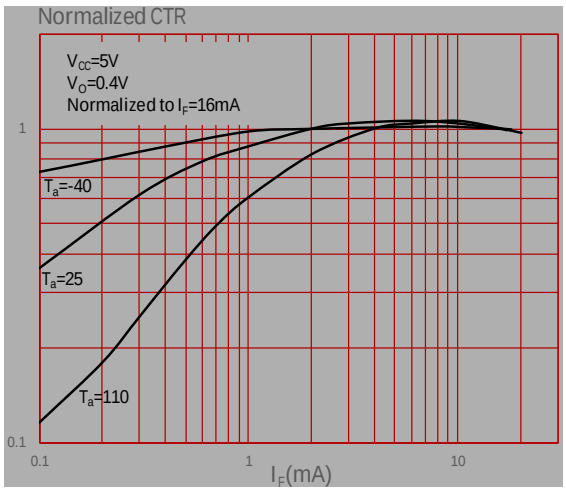

FIG.5: Normalized Current Transfer Ratio vs. Ambient Temperature

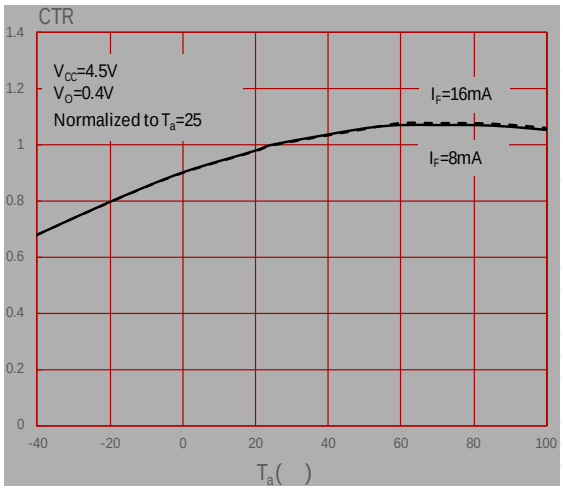

FIG.6: Output Current vs. Output Voltage

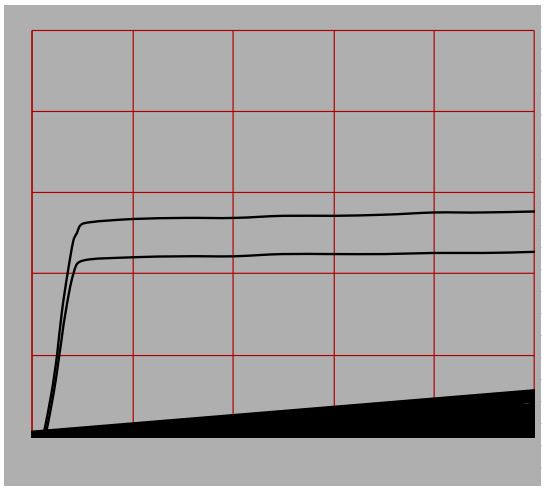

FIG.7: Low Level Output Voltage vs. Ambient Temperature

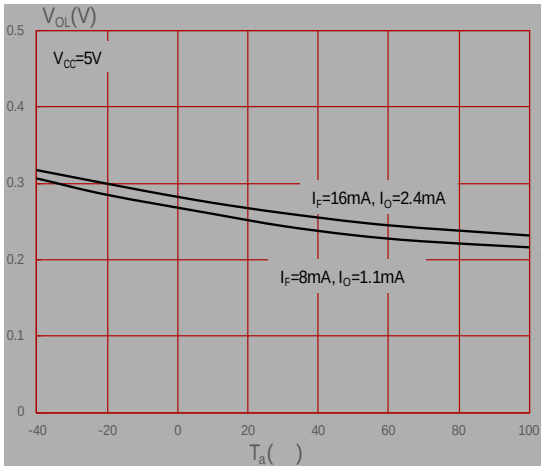

FIG.8: Propagation Delay vs. Load Resistance

TEST CIRCUITS

Fig.10: Switching Time Test Circuit and Waveform

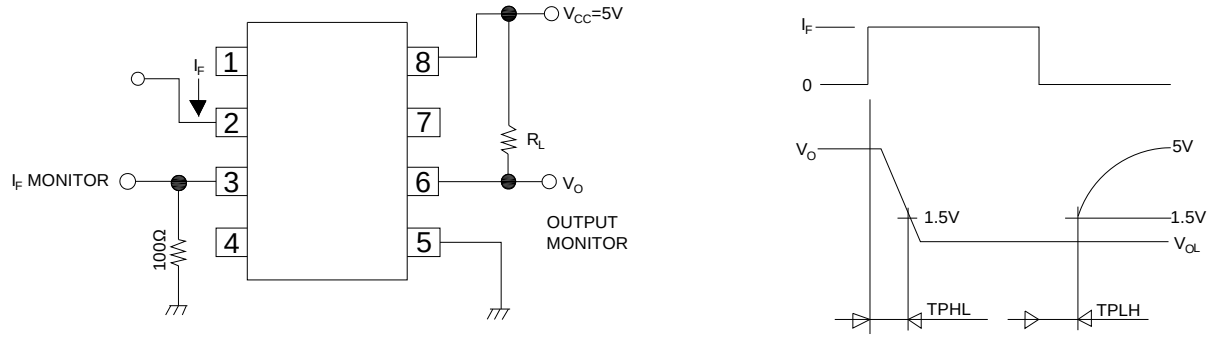

Fig.11: CMTI Test Circuit and Waveform

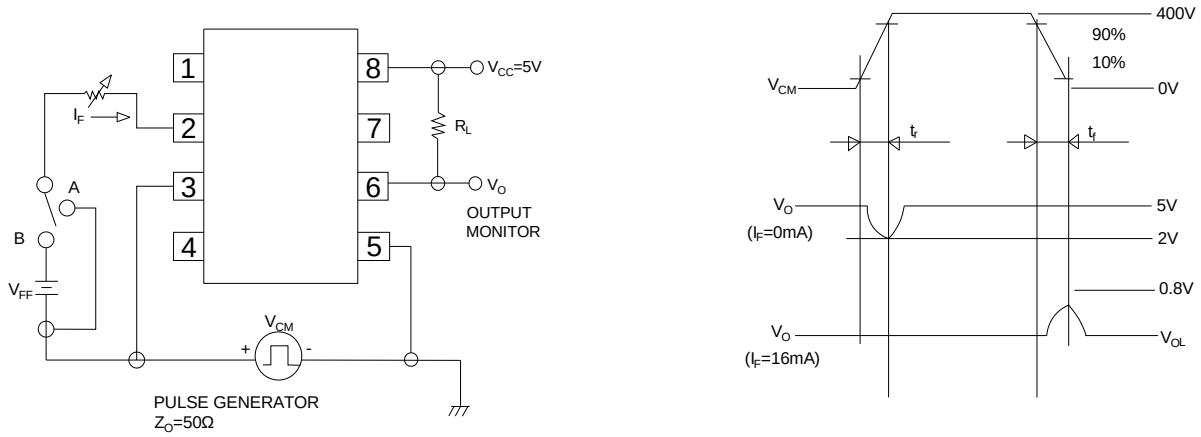

Package Dimension (Unit: mm)

Standard DIP Type:

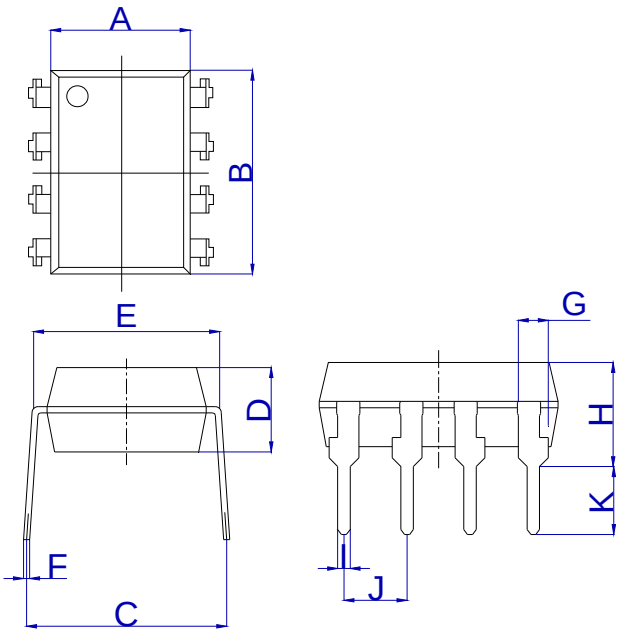

Ref.	Dimensions					
	Millimeters			Inches		
	Min.	Typ.	Max.	Min.	Typ.	Max.
A	6.20		6.60	0.244		0.260
B	9.40		9.80	0.370		0.386
C	7.15		8.95	0.281		0.352
D	3.20		3.60	0.126		0.142
E	7.32		7.92	0.288		0.312
F	0.15		0.35	0.006		0.014
G	0.90		1.50	0.035		0.059
H	3.90		4.50	0.154		0.177
I	0.40		0.60	0.016		0.024
J	2.29		2.79	0.090		0.110
K	2.24		3.24	0.088		0.128

Option SMD Type:

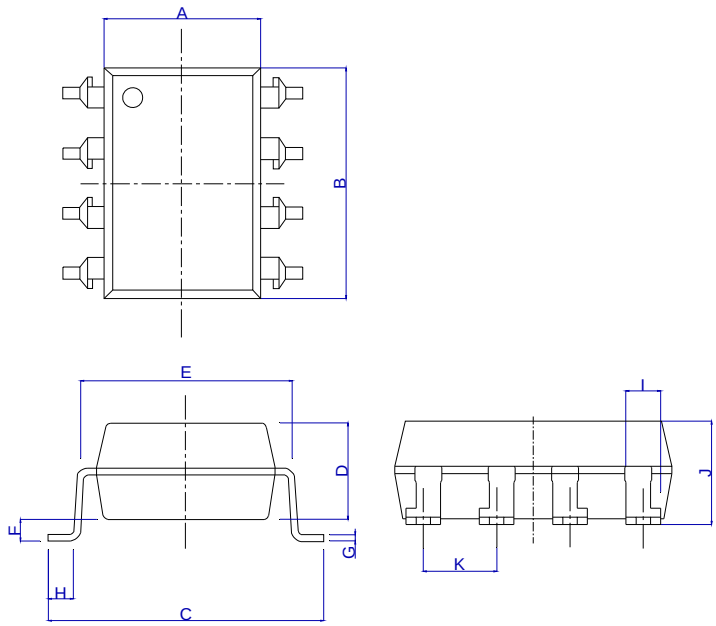

Ref.	Dimensions					
	Millimeters			Inches		
	Min.	Typ.	Max.	Min.	Typ.	Max.
A	6.20		6.60	0.244		0.260
B	9.40		9.80	0.370		0.386
C	9.50		10.50	0.374		0.413
D	3.20		3.60	0.126		0.142
E	7.32		7.92	0.288		0.312
F	0.05		0.35	0.002		0.014
G	0.16		0.36	0.006		0.014
H	0.60		1.40	0.024		0.055
I	0.90		1.50	0.035		0.059
J	3.30		3.90	0.130		0.154
K	2.29		2.79	0.090		0.110

RECOMMENDED SOLDER MASK (Dimensions in mm unless otherwise stated)

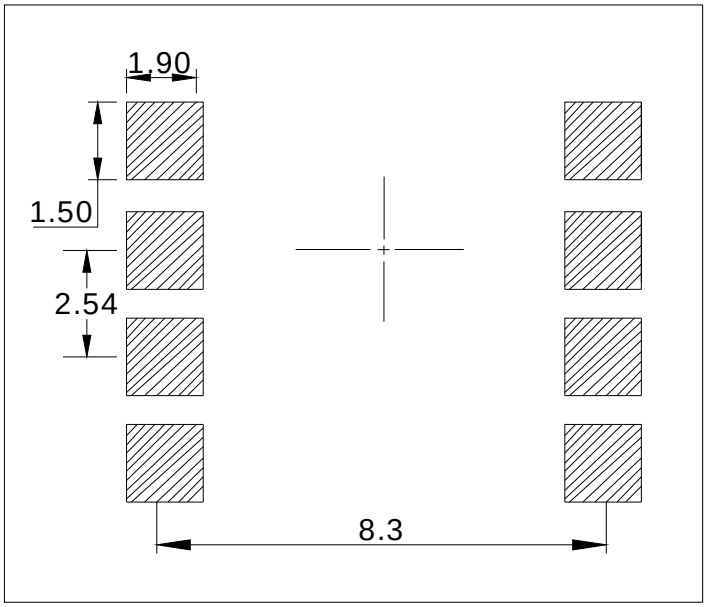

TUBE SPECIFICATIONS (Dimensions in mm unless otherwise stated)

Standard DIP

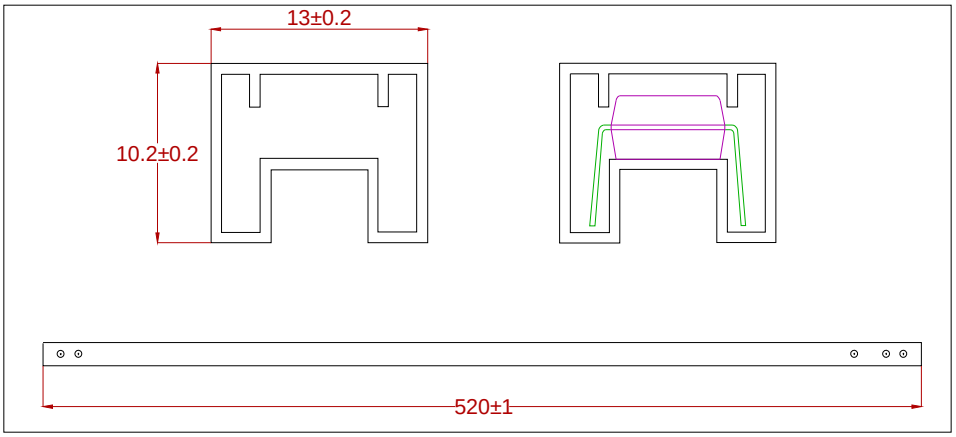

CARRIER TAPE SPECIFICATIONS (Dimensions in mm unless otherwise stated)

Option S

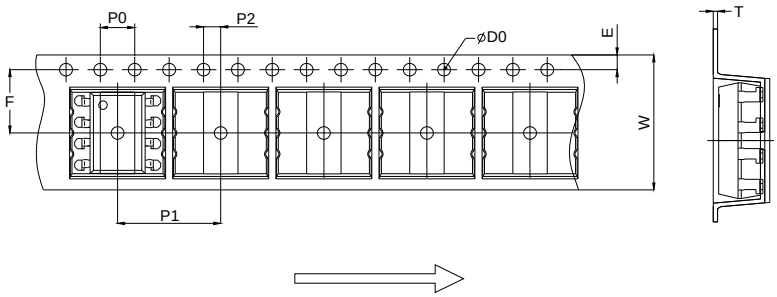

Ref.	Dimensions					
	Millimeters			Inches		
	Min.	Typ.	Max.	Min.	Typ.	Max.
D0		1.50	1.60		0.059	0.063
P0	3.90	4.00	4.10	0.154	0.157	0.161
P1	11.90	12.00	12.10	0.469	0.472	0.476
P2	1.90	2.00	2.10	0.075	0.079	0.083
E	1.65	1.75	1.85	0.065	0.069	0.073
F	7.40	7.50	7.60	0.291	0.295	0.299
T	0.35	0.40	0.45	0.014	0.016	0.018
W	15.90	16.00	16.20	0.626	0.630	0.638

Option L

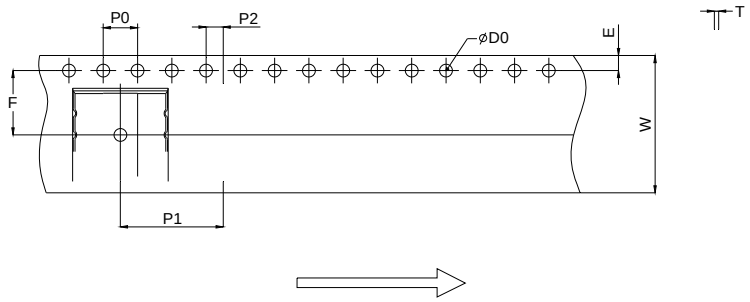

Ref.	Dimensions					
	Millimeters			Inches		
	Min.	Typ.	Max.	Min.	Typ.	Max.
D0		1.50	1.60		0.059	0.063
P0	3.90	4.00	4.10	0.154	0.157	0.161
P1	11.90	12.00	12.10	0.469	0.472	0.476
P2	1.90	2.00	2.10	0.075	0.079	0.083
E	1.65	1.75	1.85	0.065	0.069	0.073
F	7.40	7.50	7.60	0.291	0.295	0.299
T	0.35	0.40	0.45	0.014	0.016	0.018
W	15.90	16.00	16.20	0.626	0.630	0.638

REFLOW INFORMATION

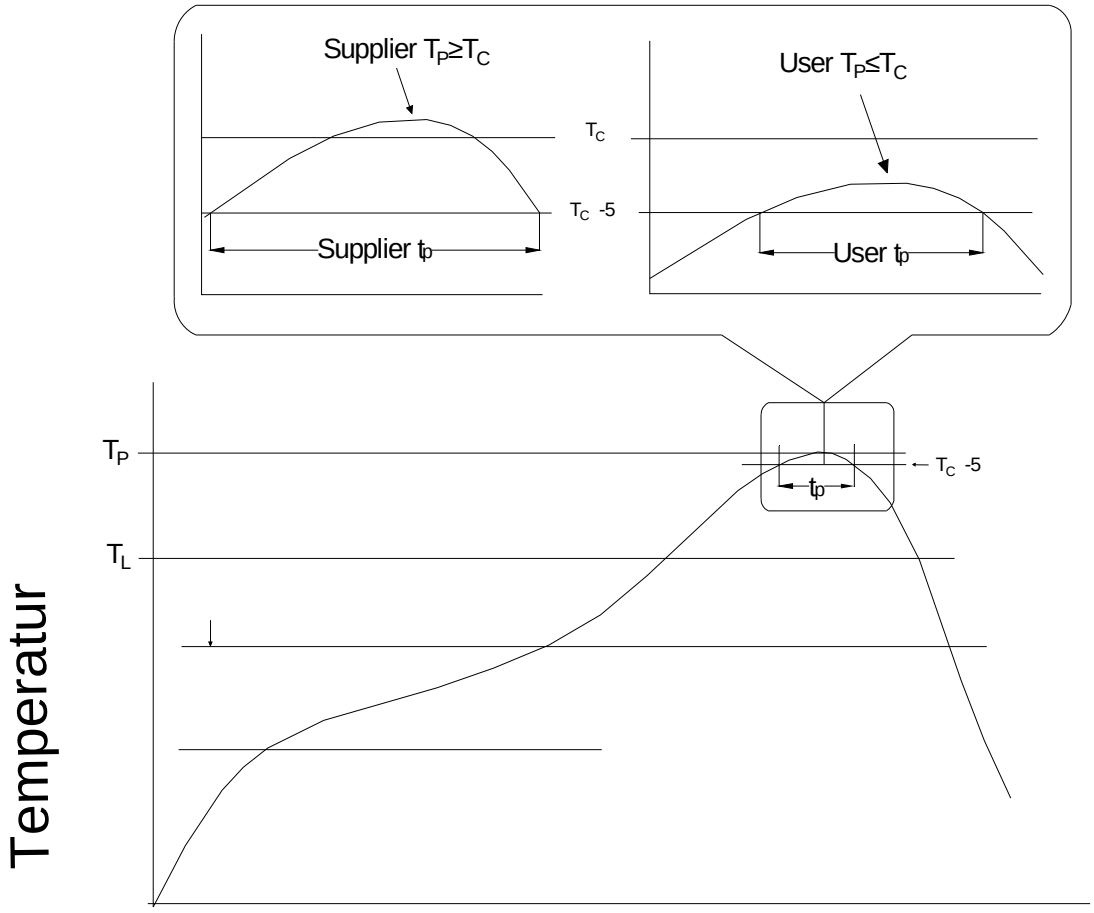

WAVE SOLDERING

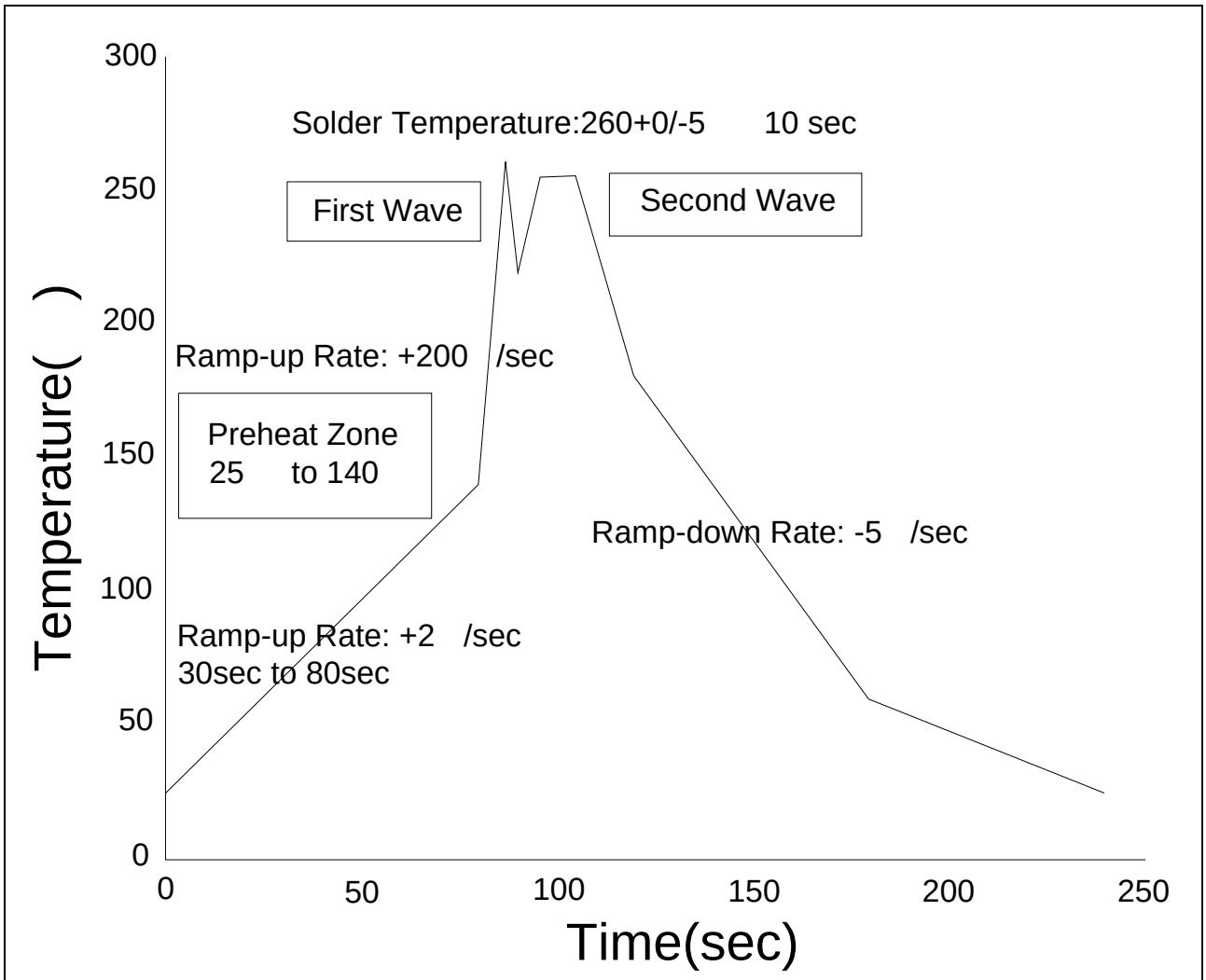

HAND SOLDERING BY SOLDERING IRON	
Soldering Temperature	360 ± 5
Soldering Time	3s max.

JOCHA21X