JOCHA22B-L5X Series

Rev.A.1.0

The products are 2MBd high-speed opto-couplers. The device is a small-outline coupler suitable for surface-mount assembly. It consists of a high-output-power infrared LED optically coupled to a high-speed photodiode-transistor chip. It is housed in the LSOP5 and LSOP5W package and guarantees a creepage distance of ≥5 mm, a clearance of ≥5 mm and an insulation thickness of ≥0.4 mm. Therefore, it meets the reinforced insulation class requirements of international safety standards. The products are widely used in programmable controllers, industrial inverters and switching power supplies.

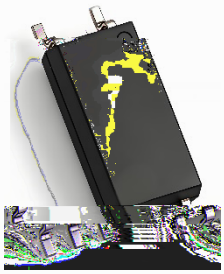

JOCHA22B-L5



JOCHA22B-L5W

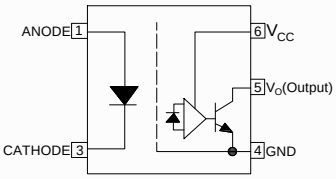

High isolation 5000 VRMS
High speed – 2MBd typical
Operating temperature range -40°C to 110°C
REACH & RoHS compliance
HBM: H3A; MM: M4; CDM: C3
CQC approved
VDE approved
UL approved

LED	Output
ON	L
OFF	H

(Temperature=25°C)

Parameter		Symbol	Value	Unit
Input	Forward Current	I_F	50	mA
	Peak Forward Current	I_{FP}	1	A
	Reverse Voltage	V_R	6	V
	Input Power Dissipation	P_D	100	mW
Output	Supply Voltage	V_{CC}	35	V

	Output Voltage	V_O	20	V
	Output Current	I_O	8	mA
	Output Power Dissipation	P_O	100	mW
Total Power Dissipation		P_{tot}	200	mW
Isolation Voltage		V_{iso}	5000	Vrms
Operating Temperature		T_{opr}	-40~110	
Junction Temperature		T_j	125	
Storage Temperature		T_{stg}	-55~125	
Soldering Temperature		T_{sol}	260	

: 100μs pulse, 100Hz frequency
: AC for 1minute, R.H.=40~60%

(Temperature=25°C)

Parameter		Symbol	Condition	Min.	Typ.	Max.	Unit
Input	Forward Voltage	V_F	I_F=10mA	-	1.35	1.6	V
	Reverse Current	I_R	V_R=6V	-	-	1	μA
	Input Capacitance	C_{in}	V=0, f=1MHz	-	60	-	pF
Output	Current Transfer Ratio	CTR	I_F=10mA, V_O=0.6V	44	90	-	%
	Low Level Output Current	I_{OL}	I_F=10mA, V_O=0.6V	4.4	9	-	mA
	High Level Output Current	I_{OH}	I_F=0mA, V_{CC}=5.5V, V_O=5.5V	-	3	500	nA
			I_F=0mA, V_{CC}=15V, V_O=15V	-	-	50	μA
	Low Level Supply Current	I_{CCL}	I_F=10mA	-	-	1.3	mA
	High Level Supply Current	I_{CCH}	V_F=0.8V	-	-	1.3	mA
	Logic Low Output Voltage	V_{OL}	I_F=16mA, I_O=2.4mA, V_{CC}=4.5V	-	0.3	0.6	V
	Isolation Resistance	R_{ISO}	DC500V 40~60%R.H.	-	10^{12}	-	Ω

	Floating Capacitance	C_{IO}	V=0, f=1MHz	-	0.6	-	pF
Switching Characteristics	LED Trigger Current	I_{FT}	I_O=0.75mA, V_O 0.8V	-	-	5	mA
	Propagation Delay Time to Logic Low	TPHL	I_F=0→10mA, R_L=20kΩ, C_L=100pF	30	200	400	ns
			I_F=0→10mA, R_L=20kΩ, C_L=10pF	-	100	-	ns
	Propagation Delay Time to Logic High	TPLH	I_F=10→0mA, R_L=20kΩ, C_L=100pF	270	400	550	ns
			I_F=10→0mA, R_L=20kΩ, C_L=10pF	-	130	-	ns
	Common Mode Transient Immunity at Logic High	CM_H	I_F=0mA, V_{CM}=1500Vpp, R_L=20kΩ	±15	±30	-	kV/μs
	Common Mode Transient Immunity at Logic Low	CM_L	I_F=10mA, V_{CM}=1500Vpp, R_L=20kΩ	±25	±30	-	kV/μs

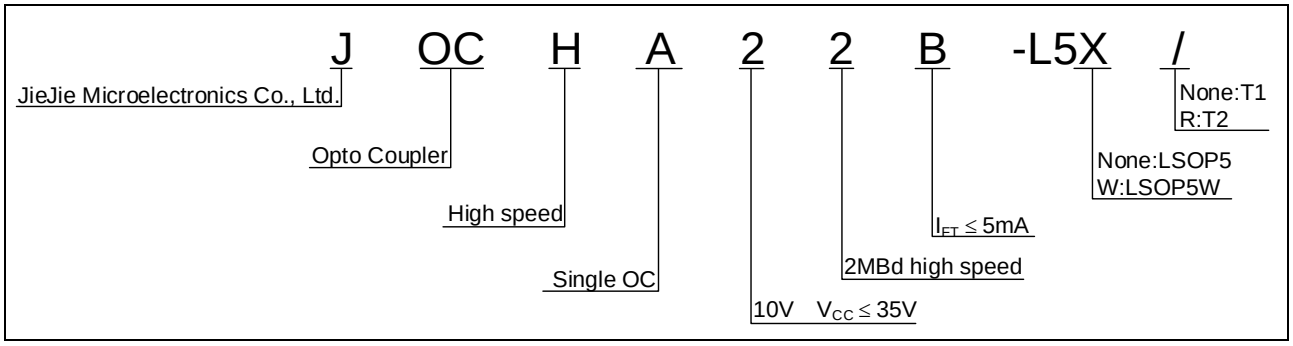

LSOP5	3000 Units/Reel	2 Reels/Inner box	5 Inner box/Outer box =30k Units

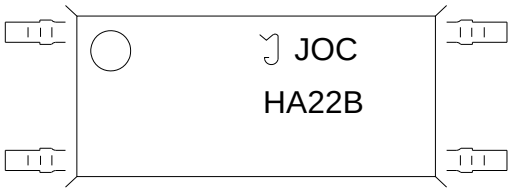

FIG.1: Forward Current vs. Forward Voltage

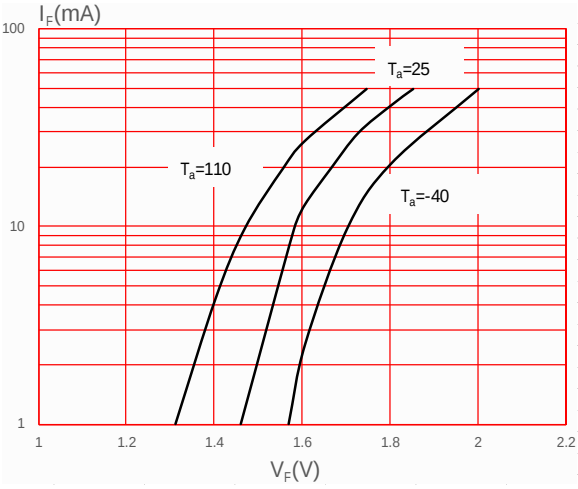

FIG.2: High Level Output Current vs. Ambient Temperature

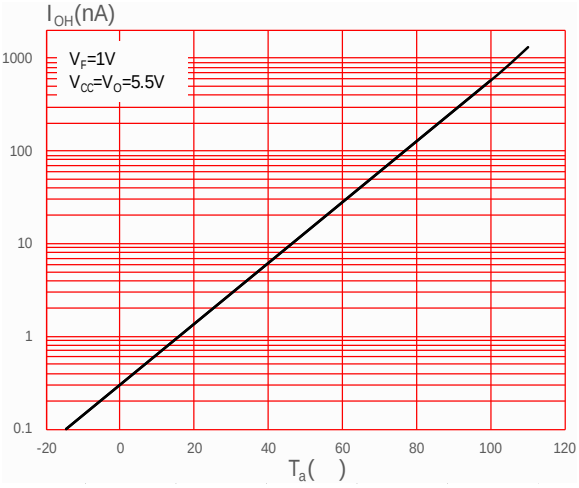

FIG.3: Output Current vs. Forward Current

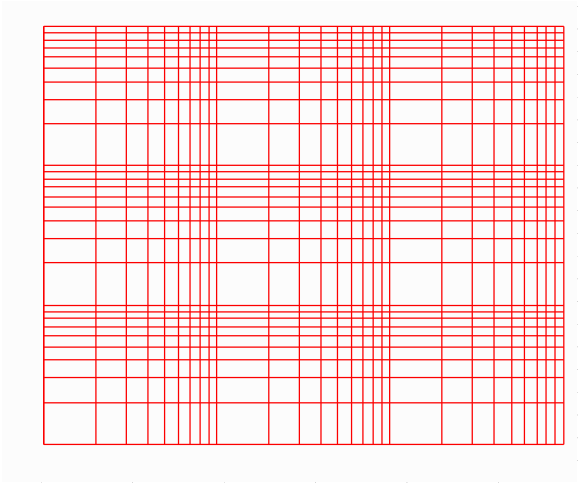

FIG.4: Threshold Input Current vs. Ambient Temperature

FIG.7: Propagation Delay vs. Load Resistance

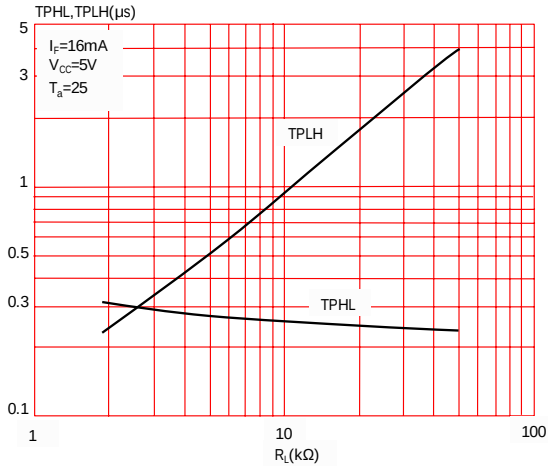

FIG.8: Propagation Delay vs. Ambient Temperature

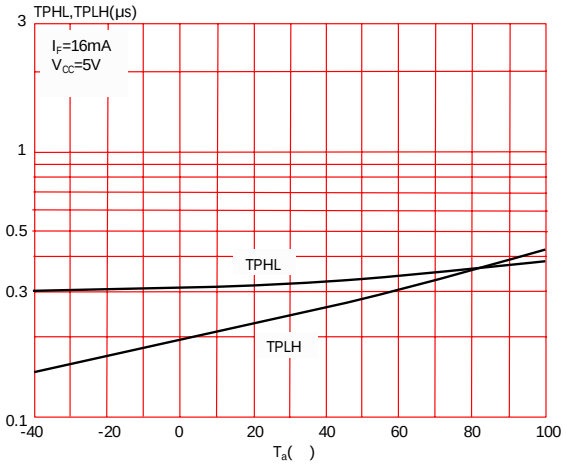

Fig.9: Switching Time Test Circuit and Waveform

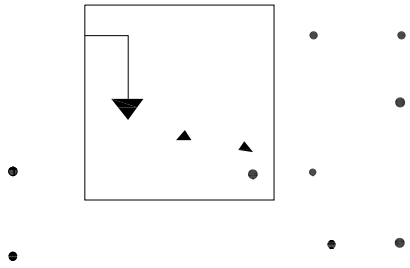

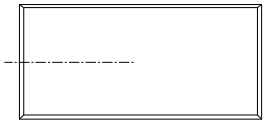

Ref.	Dimensions					
	Millimeters			Inches		
	Min.	Typ.	Max.	Min.	Typ.	Max.
A	7.40		7.80	0.291		0.307
B	3.40		3.80	0.134		0.150
C	0.00		0.20	0.000		0.008
D	1.80		2.20	0.071		0.087
E	8.10		8.70	0.319		0.343
F	0.40		1.00	0.016		0.039
G	9.90		10.50	0.390		0.413
H	0.10		0.30	0.004		0.012
I	1.80		2.40	0.071		0.0940
J	0.25		0.55	0.010		0.022
K						

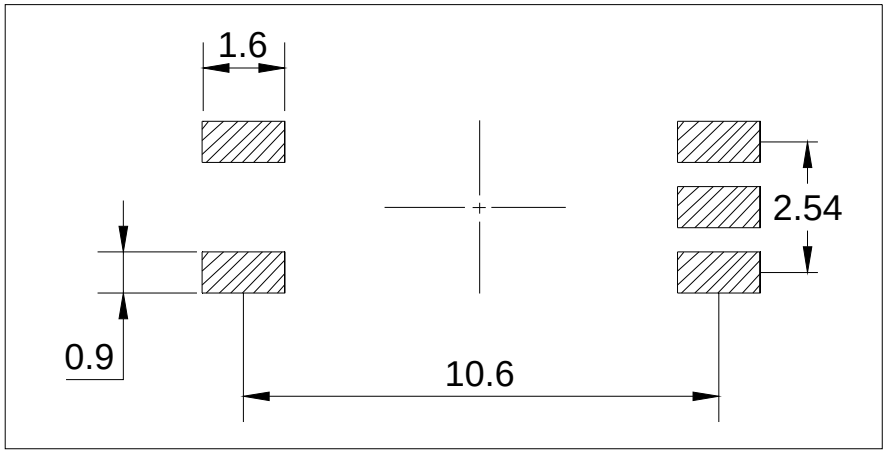
1.6
2.54
0.9
10.6

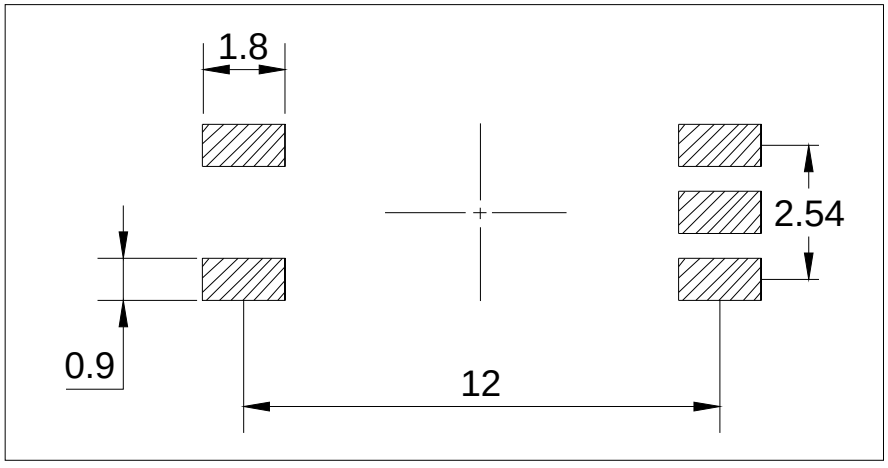
1.8
2.54
0.9
12

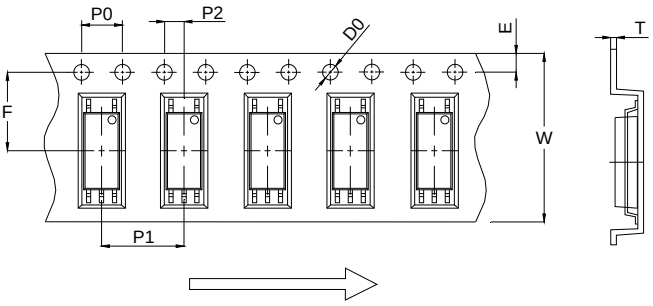

Ref.	Dimensions					
	Millimeters			Inches		
	Min.	Typ.	Max.	Min.	Typ.	Max.
D0	1.50	1.55	1.60	0.059	0.061	0.063
P0	3.90	4.00	4.10	0.154	0.157	0.161
P1	7.90	8.00	8.10	0.311	0.315	0.319
P2	1.90	2.00	2.10	0.075	0.079	0.083
E	1.65	1.75	1.85	0.065	0.069	0.073
F	7.40	7.50	7.60	0.291	0.295	0.299
T	0.35	0.40	0.45	0.014	0.016	0.018
W	15.80	16.00	16.20	0.622	0.630	0.638

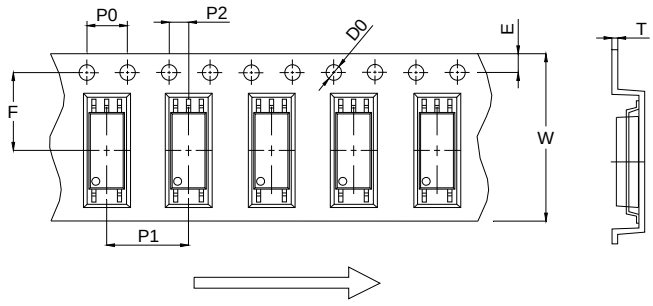

Ref.	Dimensions					
	Millimeters			Inches		
	Min.	Typ.	Max.	Min.	Typ.	Max.
D0	1.50	1.55	1.60	0.059	0.061	0.063
P0	3.90	4.00	4.10	0.154	0.157	0.161
P1	7.90	8.00	8.10	0.311	0.315	0.319
P2	1.90	2.00	2.10	0.075	0.079	0.083
E	1.65	1.75	1.85	0.065	0.069	0.073
F	7.40	7.50	7.60	0.291	0.295	0.299
T	0.35	0.40	0.45	0.014	0.016	0.018
W	15.80	16.00	16.20	0.622	0.630	0.638

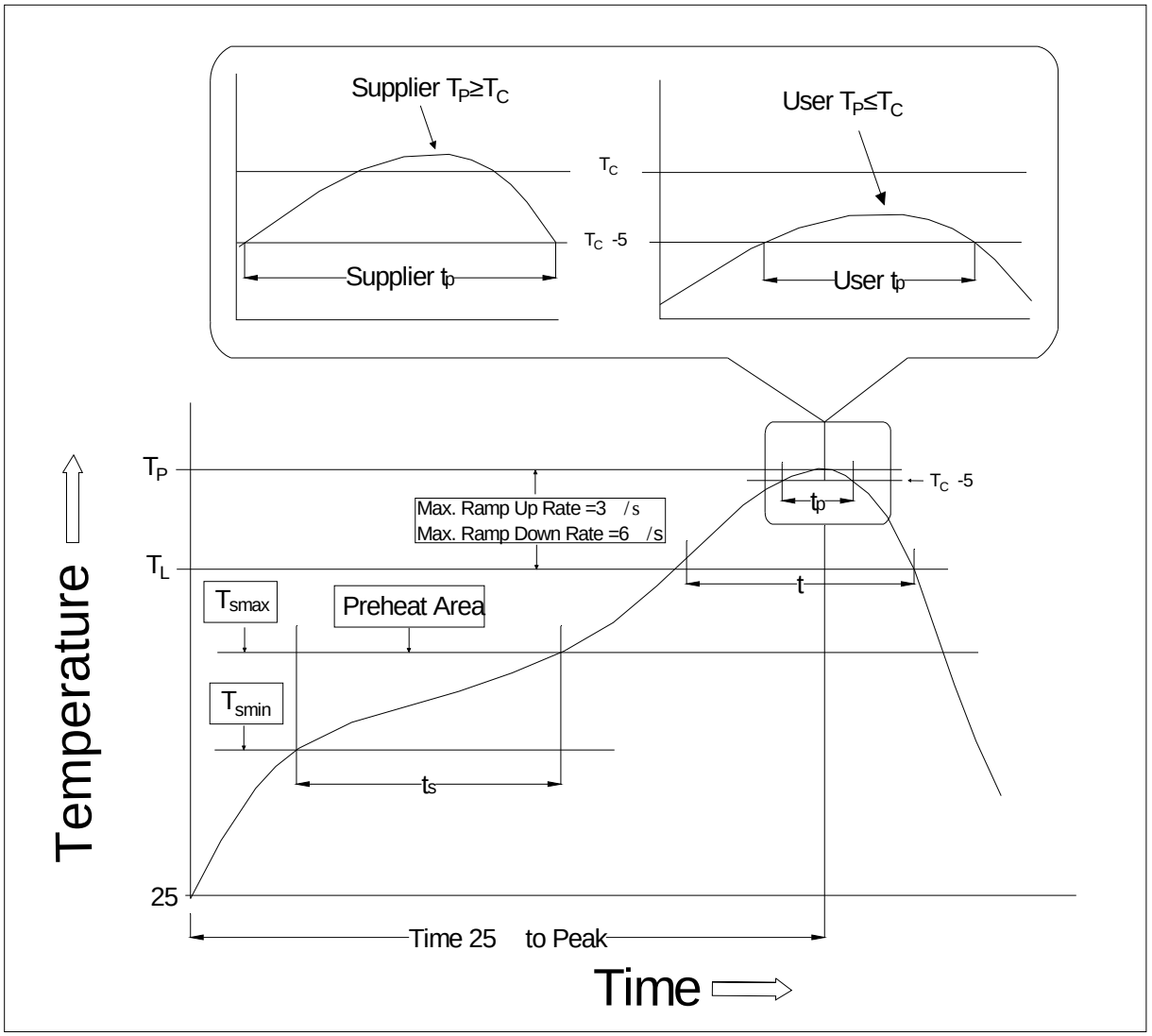

Profile Feature	Sn-Pb Assembly Profile	Pb-Free Assembly Profile
Temperature Min. (Tsmin)	100	150
Temperature Max. (Tsmax)	150	200
Time (ts) from (Tsmin to Tsmax)	60-120 seconds	60-120 seconds
Ramp-up Rate (tL to tP)	3 /second max.	3 /second max.
Liquidus Temperature (TL)	183	217
Time (tL) Maintained Above (TL)	60-150 seconds	60-150 seconds
Peak Body Package Temperature	235 +0 /-5	260 +0 /-5
Time (tP) within 5 of 260	10 seconds	10 seconds
Ramp-down Rate (TP to TL)	3-6 /second	3-6 /second
Time 25 to Peak Temperature	6 minutes max.	8 minutes max.

Note:

1. Reflow soldering is recommended at the temperatures and times shown, no more than three times.

2. Avoid direct contact between the epoxy body and any tools or surfaces exceeding its maximum storage temperature.

3. Application of pressure on the epoxy body is prohibited at elevated temperatures. In specific scenarios, any applied force must not exceed 2.5N.

4. Ensure the component has cooled to ambient temperature before proceeding with any subsequent manufacturing steps.

5. The component has a shelf life of one year when stored under standard conditions.

6. Recommend storage Temp.: 0~40°C;

Recommend storage humidity: <60%;

MSL level: MSL 1

Information furnished in this document is believed to be accurate and reliable. However, Jiangsu JieJie Microelectronics Co., Ltd. assumes no responsibility for the consequences of use without consideration for such information nor use beyond it. Information mentioned in this document is subject to change without notice, apart from that when an agreement is signed, Jiangsu JieJie complies with the agreement.
Products and information provided in this document have no infringement of patents. Jiangsu JieJie assumes no responsibility for any infringement of other rights of third parties which may result from the use of such products and information. This document supersedes and replaces all information previously supplied.
is a registered trademark of Jiangsu JieJie Microelectronics Co., Ltd.
Copyright © 2026 Jiangsu JieJie Microelectronics Co., Ltd. All rights reserved.