JOCT355X-M4 Series

Rev.A.1.0

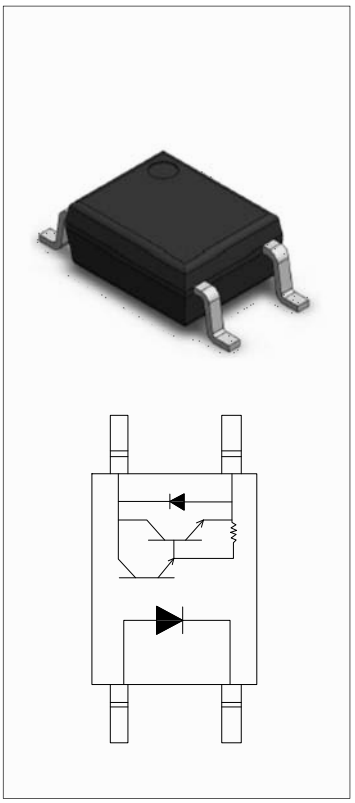

Parameter		Symbol	Value	Unit

:

:

Parameter		Symbol	Condition	Min.	Typ.	Max.	Unit

:

Grade Sign	Test Condition	Min. (%)	Max. (%)

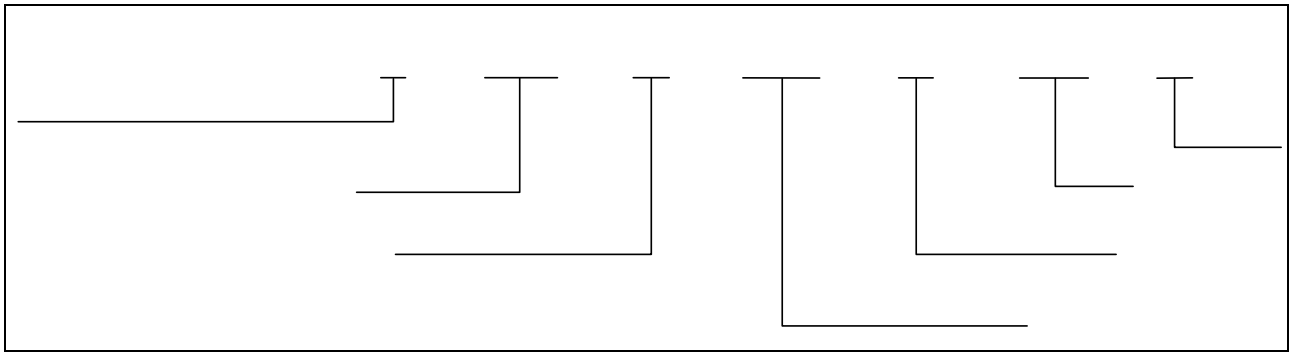

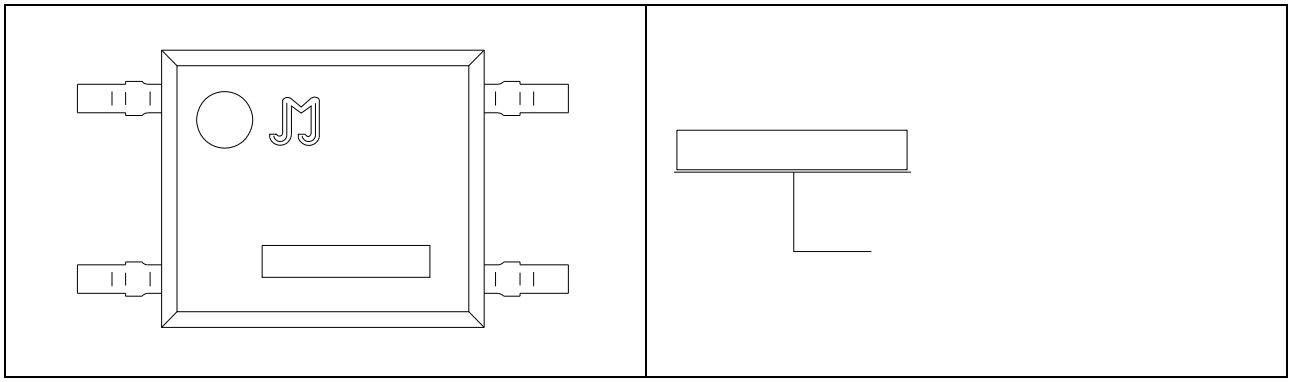

FIG.1:

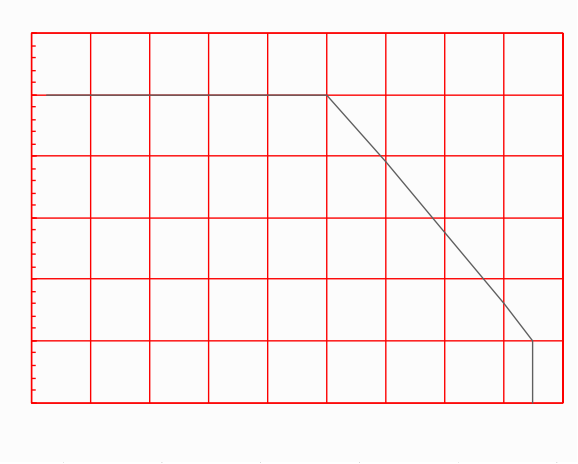

FIG.2:

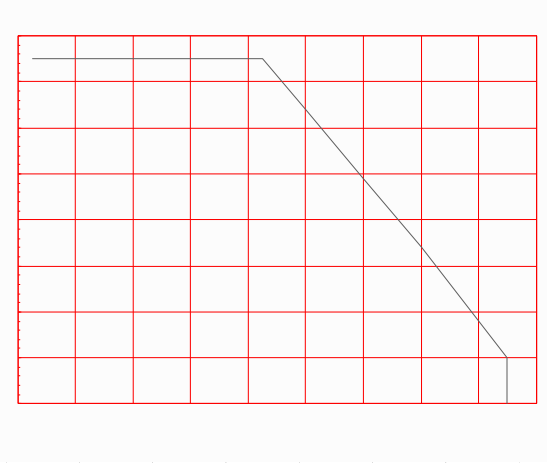

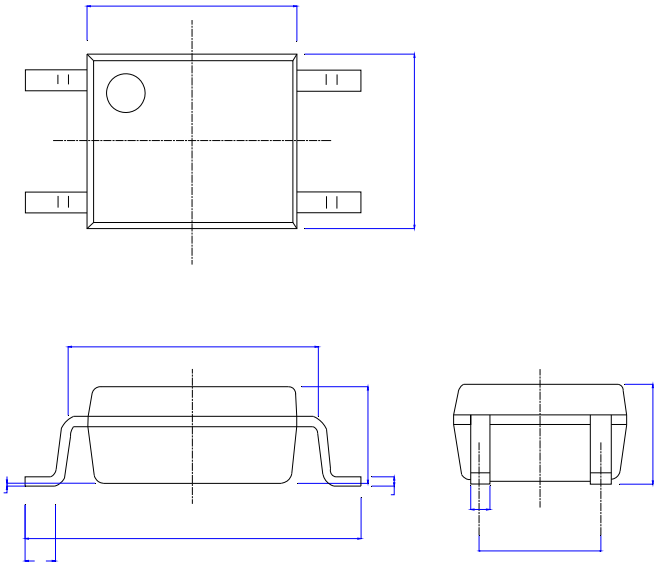

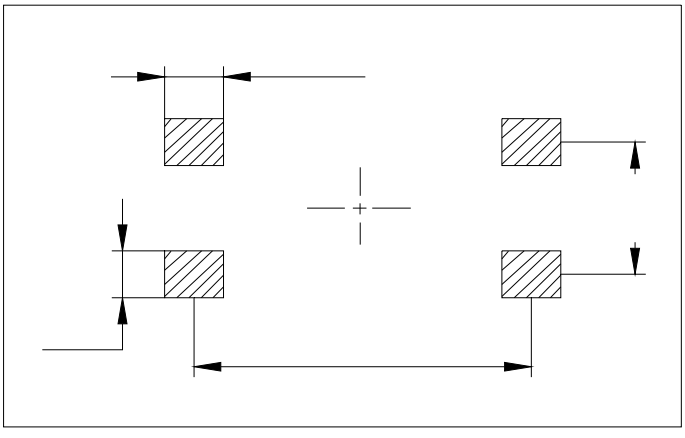

Option None

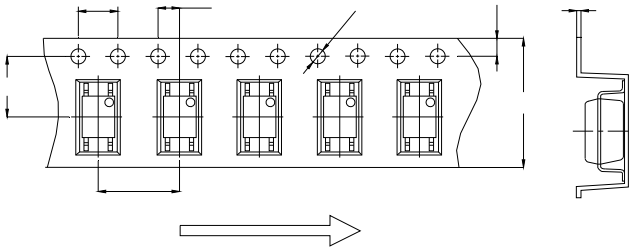

Option R

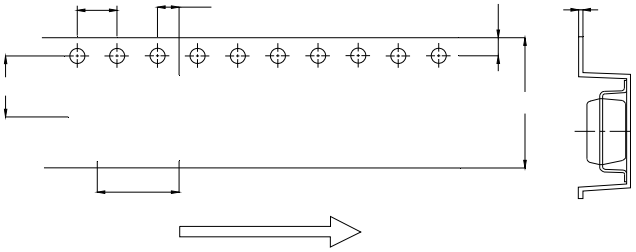

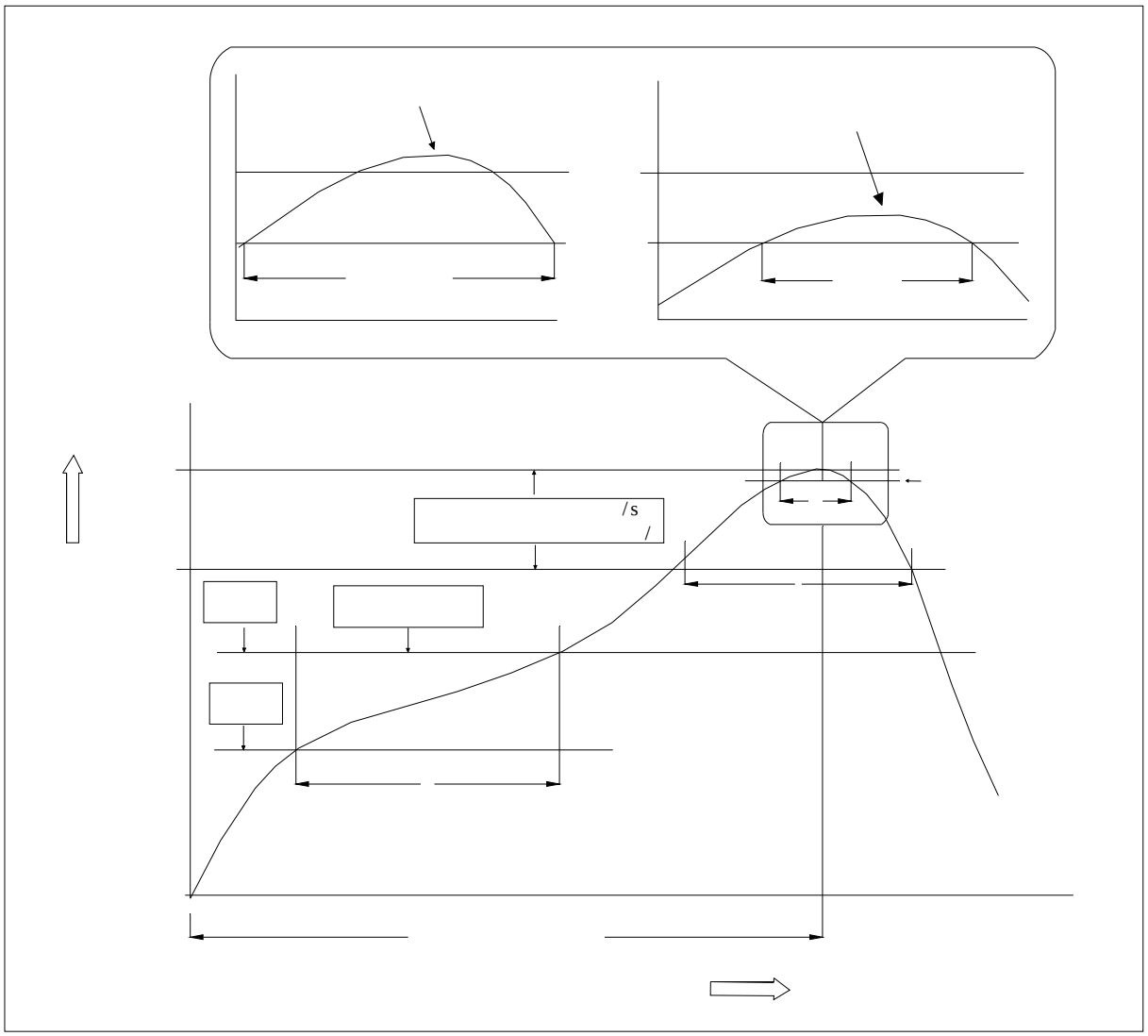

Profile Feature	Sn-Pb Assembly Profile	Pb-Free Assembly Profile

JOCT355X