JMG300HF12G2S1

Trench FS IGBT

Features

Product Summary

Parameter	Value	Unit

Applications

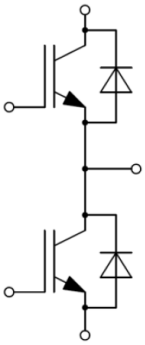

IGBT, Absolute Maximum Ratings

Parameter	Conditions	Symbol	Values	Unit
	℃			

IGBT Electrical Characteristics

Parameter	Conditions		Symbol	Values Min.	Typ.	Max.	Unit
	℃						
	℃						

CC

FRED Absolute Maximum Ratings

Parameter	Conditions	Symbol	Values	Unit

FRED Electrical Characteristics

Parameter	Conditions		Symbol	Values			Unit
				Min.	Typ.	Max.	
	=						
	=						

Circuit Diagram

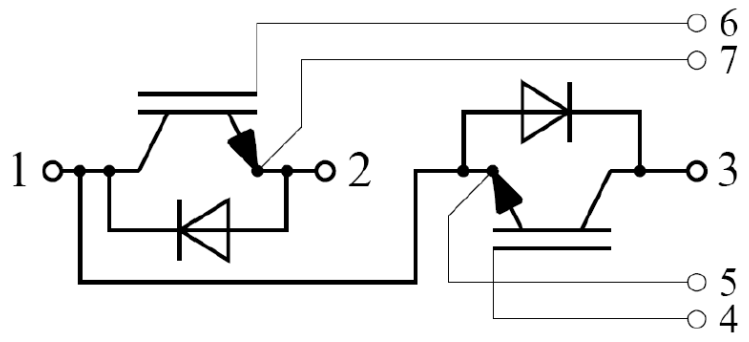
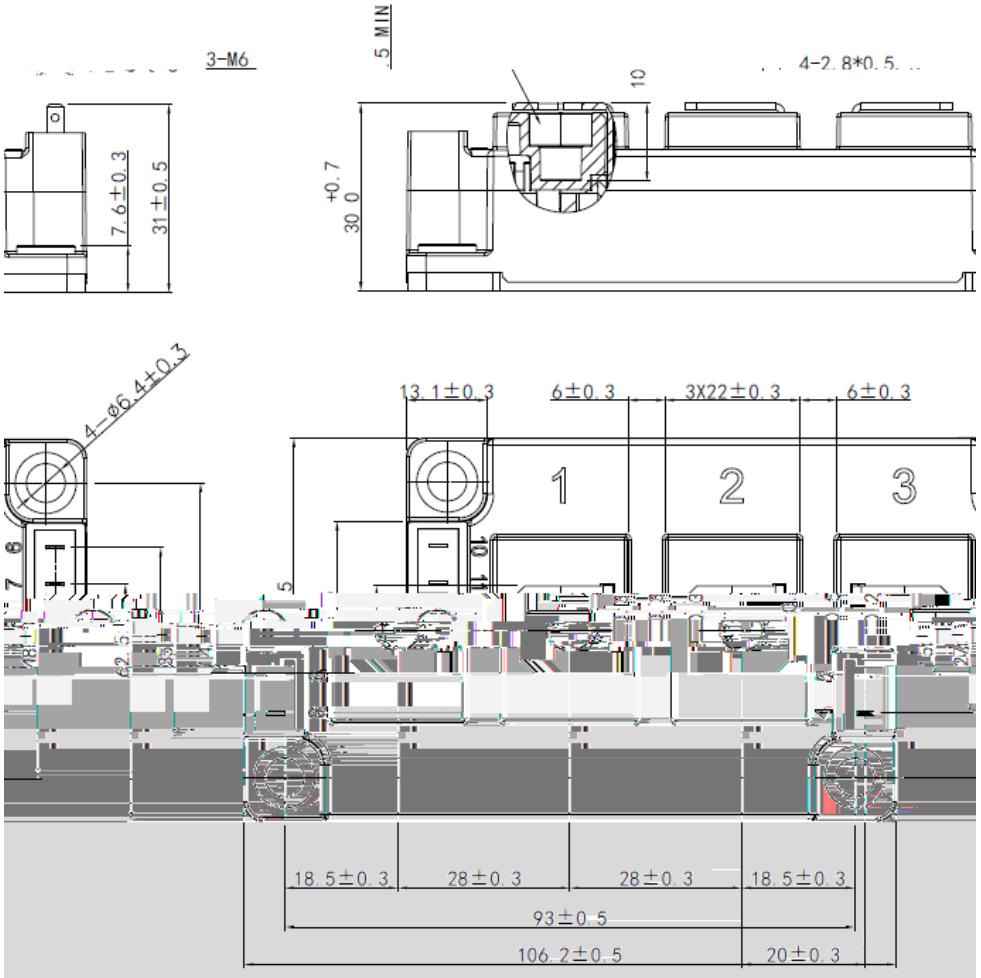
Package Outlines (mm)