Features

Product Summary

Applications

IGBT Electrical Characteristics

Parameter	Conditions	Symbol	Values			Unit
			Min.	Typ.	Max.	
	℃					
	℃					

FRED Absolute Maximum Ratings

Parameter	Conditions	Symbol	Values	Unit

FRED Electrical Characteristics

Parameter	Conditions		Symbol	Values			Unit
				Min.	Typ.	Max.	
	=						
	=						

NTC-Thermistor Characteristics

Parameter	Conditions	Symbol	Values			Unit
			Min.	Typ.	Max.	
	℃					

Module Characteristics

Parameter	Conditions	Symbol	Values			Unit
			Min.	Typ.	Max.	

Ordering Information

Device	Marking	Package	Weight	Inner Box	Per Carton

Circuit Diagram

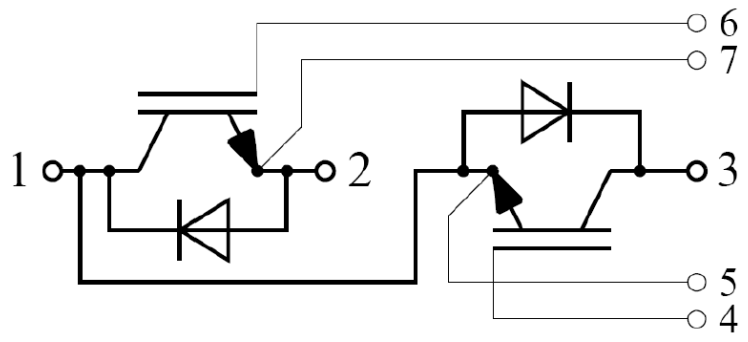
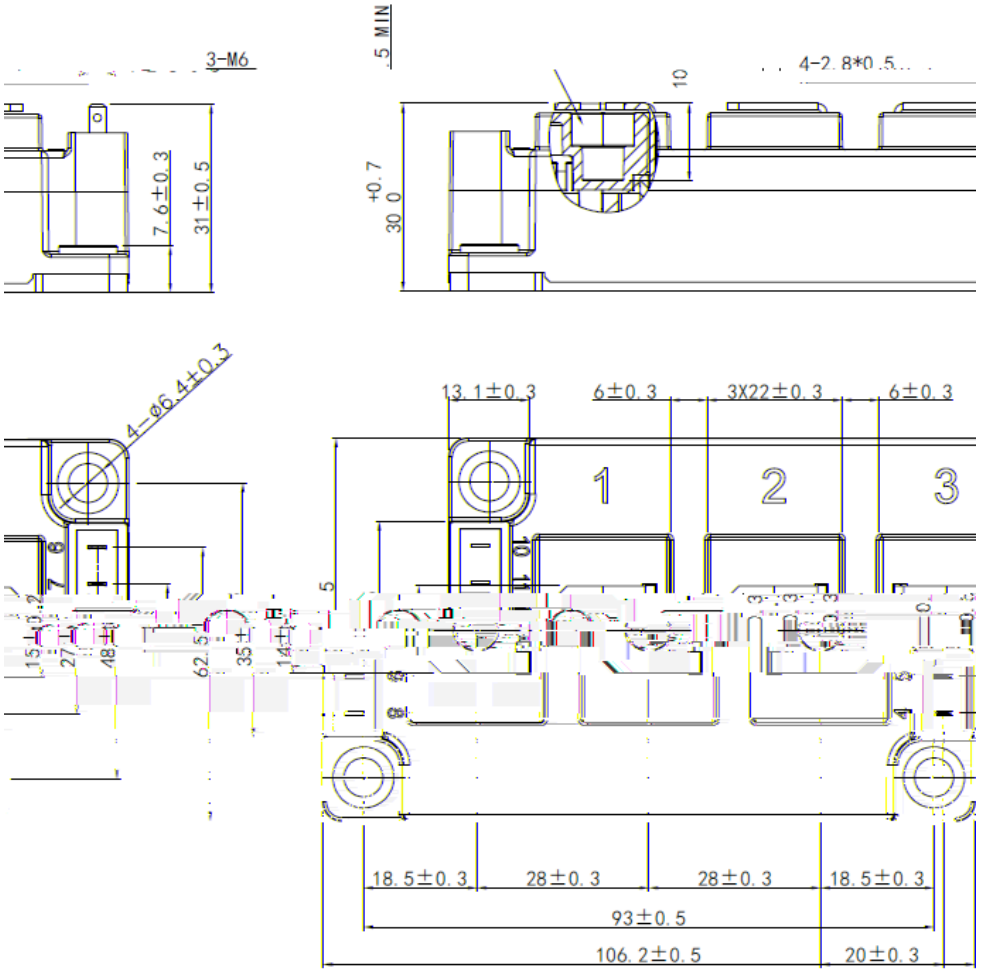
Package Outlines (mm)