	℃					
	℃					
	℃					
						Ω

FIG.1: Forward characteristics(per diode)

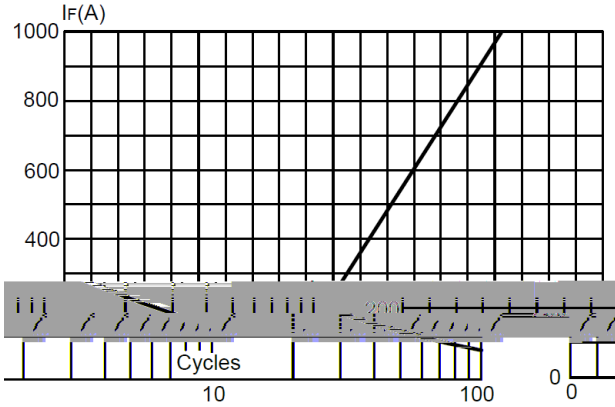

FIG.2: Peak on-state surge current

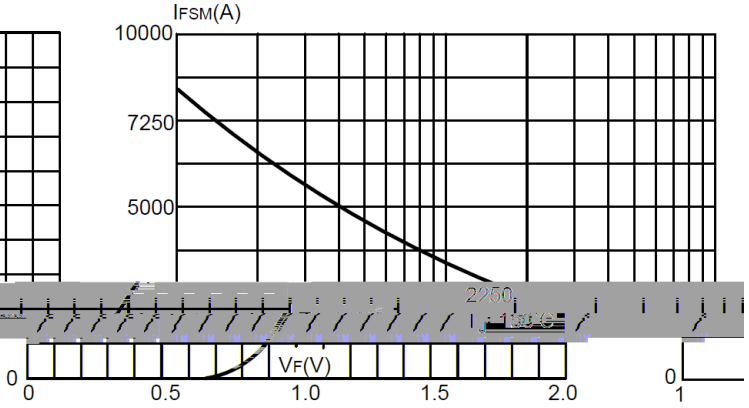

FIG.3: Forward current vs. case temperature

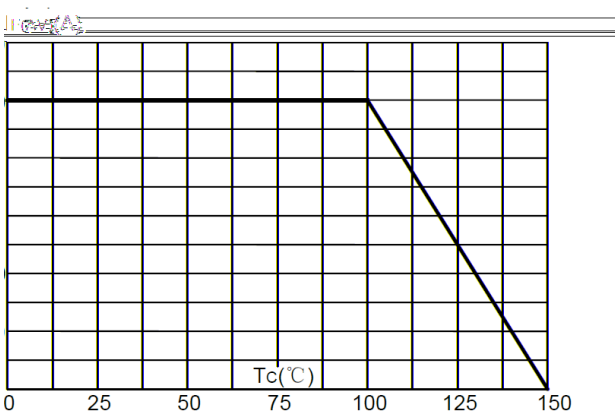

FIG.4: Maximum transient thermal impedance

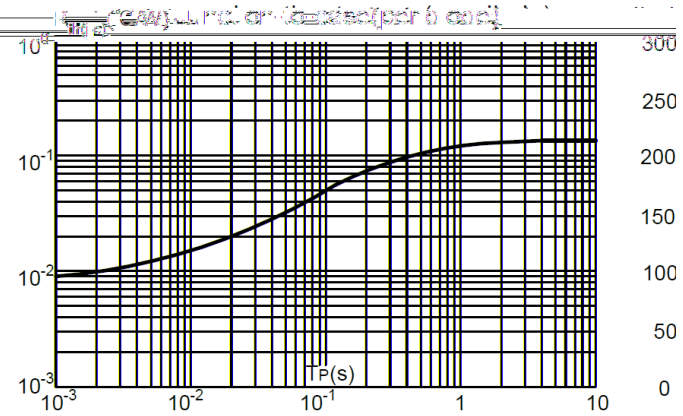

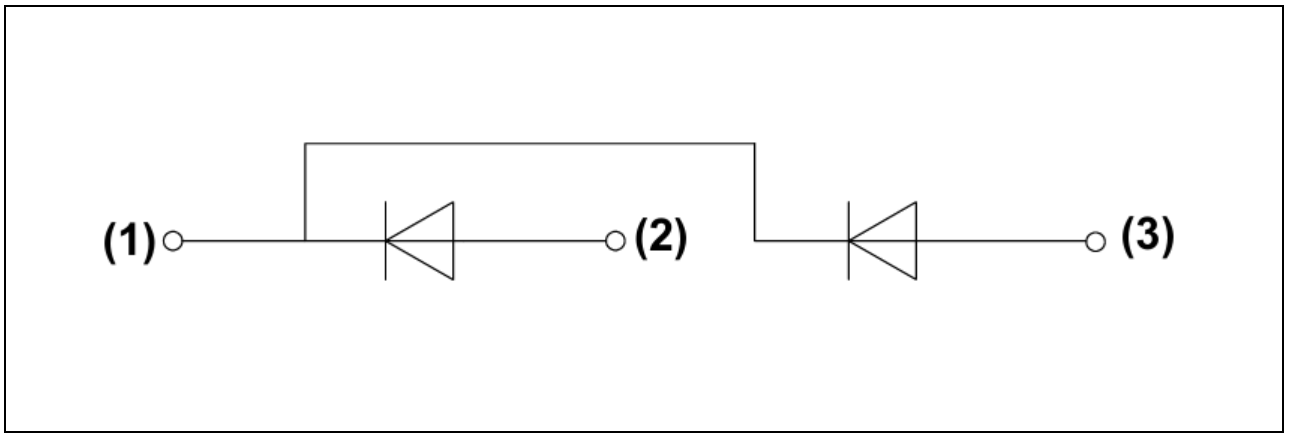

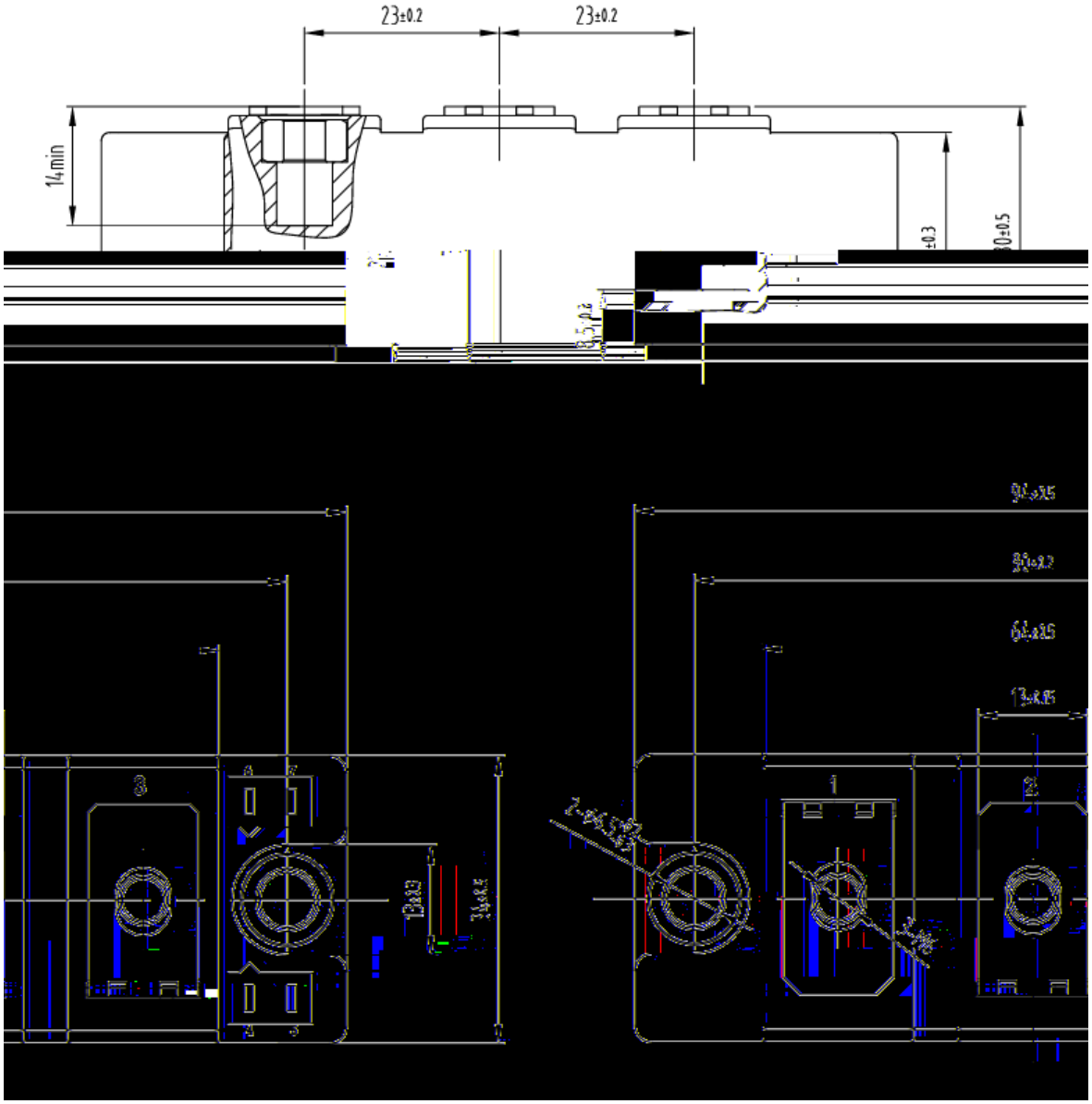
23±0.2
23±0.2
14min
±0.3
30±0.5