℃

	℃					
	℃					
	℃					
	℃					
	℃					
	℃					
	℃					

FIG.1: Power dissipation vs. on-state current (per thyristor or diode)

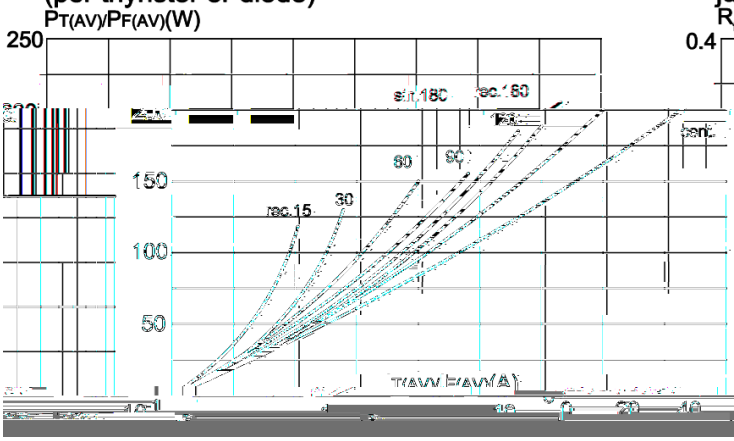

FIG.2: Maximum transient thermal impedance junction to case(per thyristor or diode)

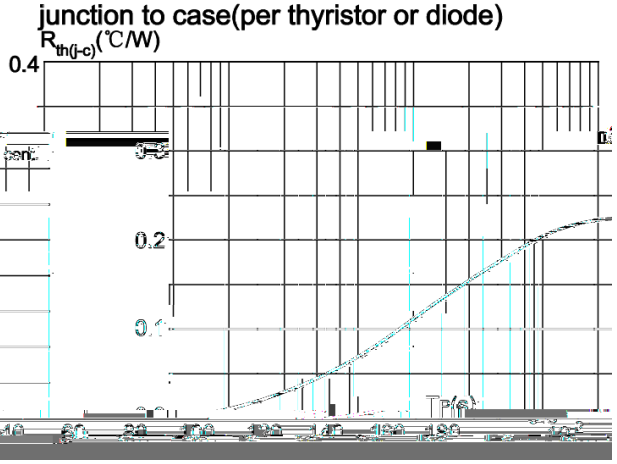

FIG.3: Forward characteristics (per thyristor or diode)

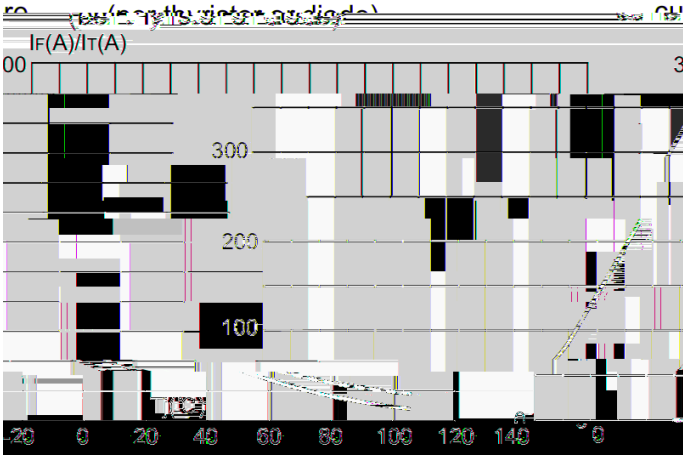

FIG.4: Relative variations of gate trigger current, holding current and latching current versus junction temperatu

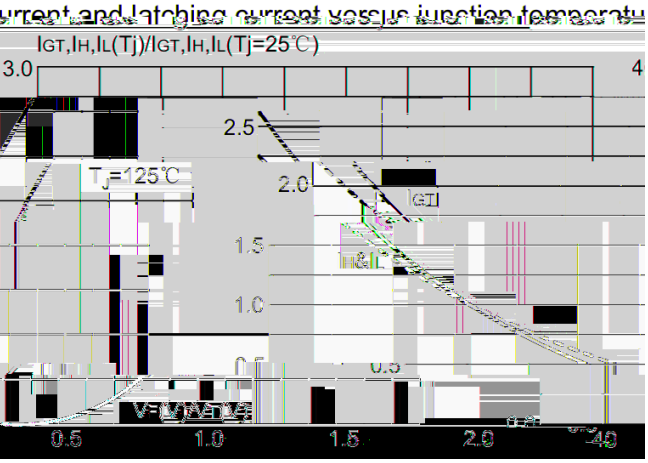

ture

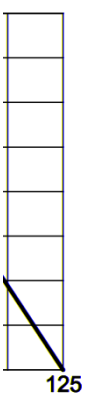

FIG.5 Gate trigger characteristics

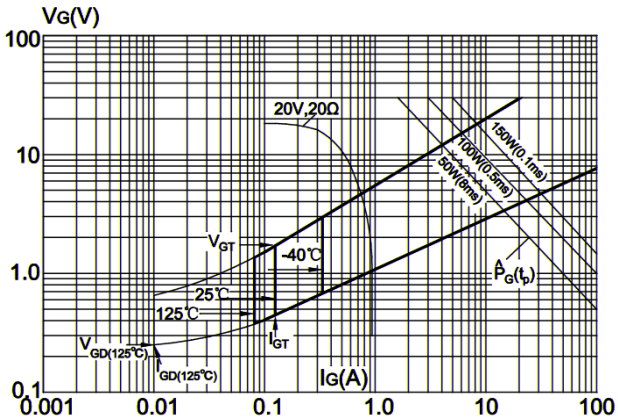

FIG.6: Forward current vs. case tempera (per thyristor or diode)

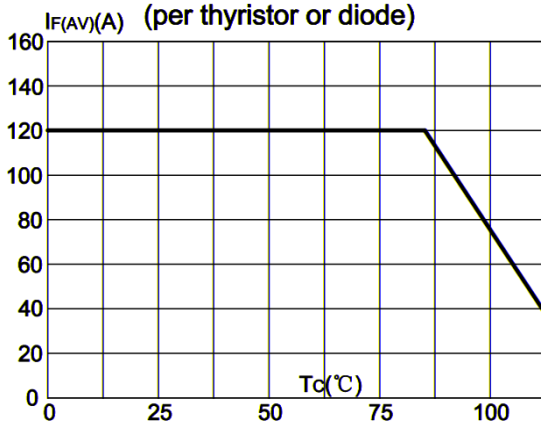

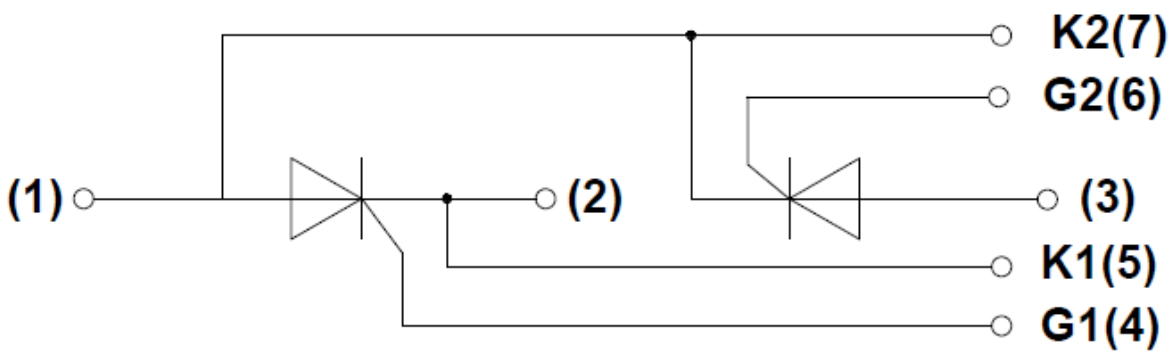
K2(7)
G2(6)
(1)
(2)
(3)
K1(5)
G1(4)

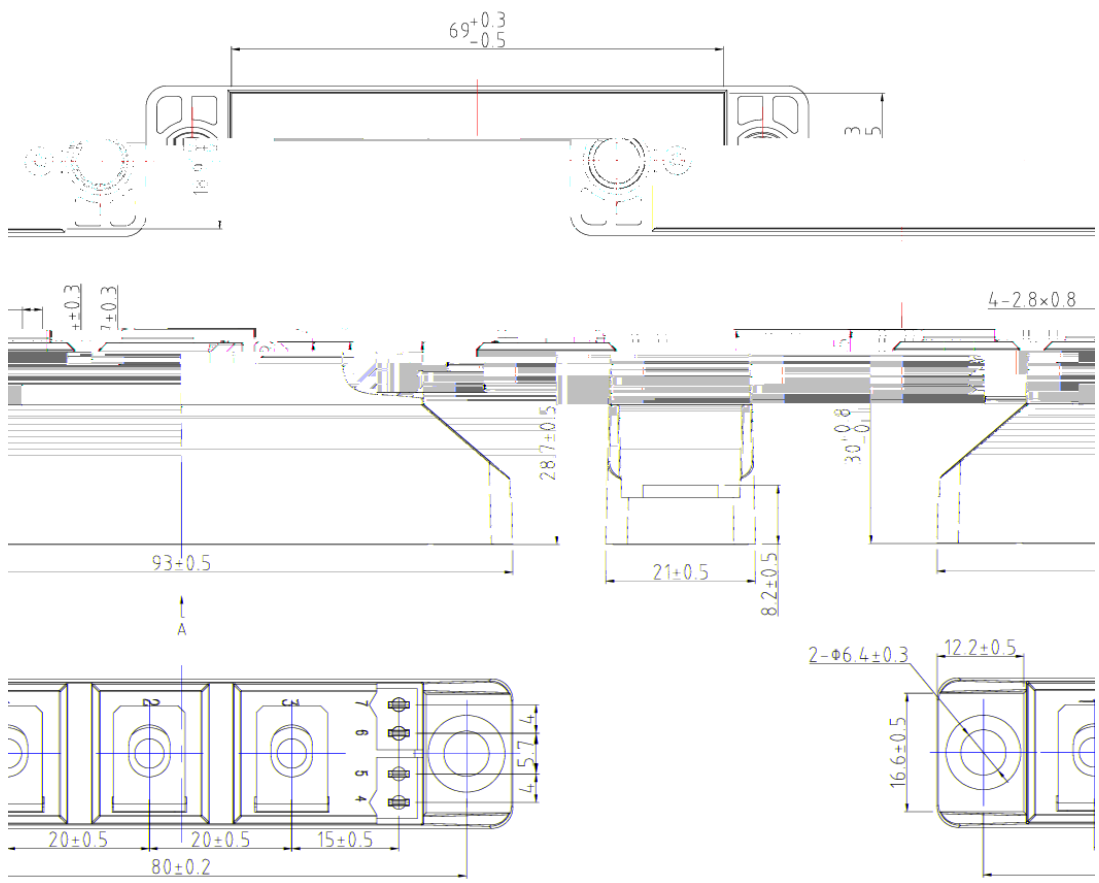
69+0.3 -0.5
4-2.8×0.8
28.7±0.5
30+0.8 -0.1
93±0.5
21±0.5
8.2±0.5
A
2-Φ6.4±0.3
12.2±0.5
16.6±0.5
20±0.5
20±0.5
15±0.5
80±0.2