Electrical Characteristics

Parameter	Conditions	Symbol	Values			Unit
			Min.	Typ.	Max.	
	℃					

Thermal Characteristics

Parameter	Conditions	Symbol	Values			Unit
			Min.	Typ.	Max.	

Ordering Information

Device	Marking	Package	Weight	Inner Box	Per Carton

Typical Electrical & Thermal Characteristics

FIG.1: On-state characteristics(per thyristor)

FIG.2: Surge overload current vs. time

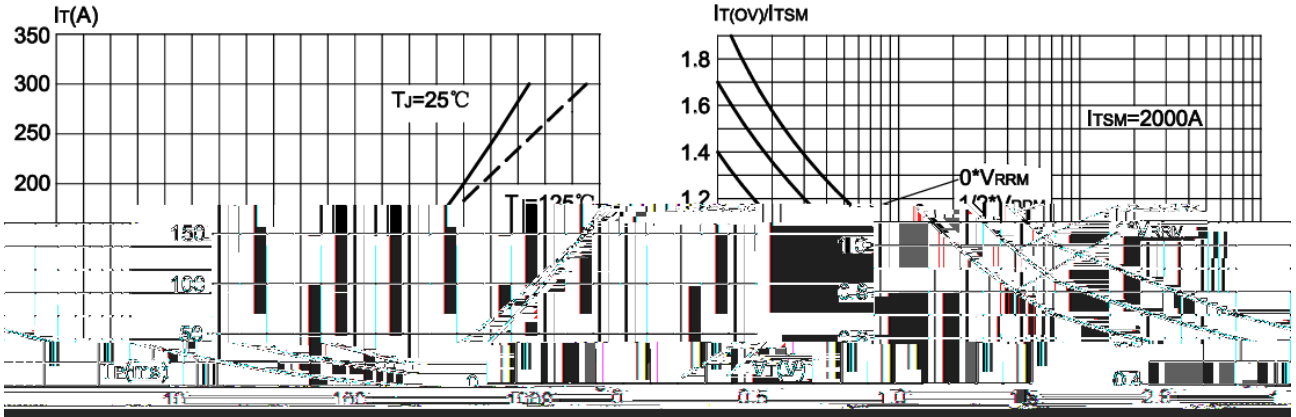

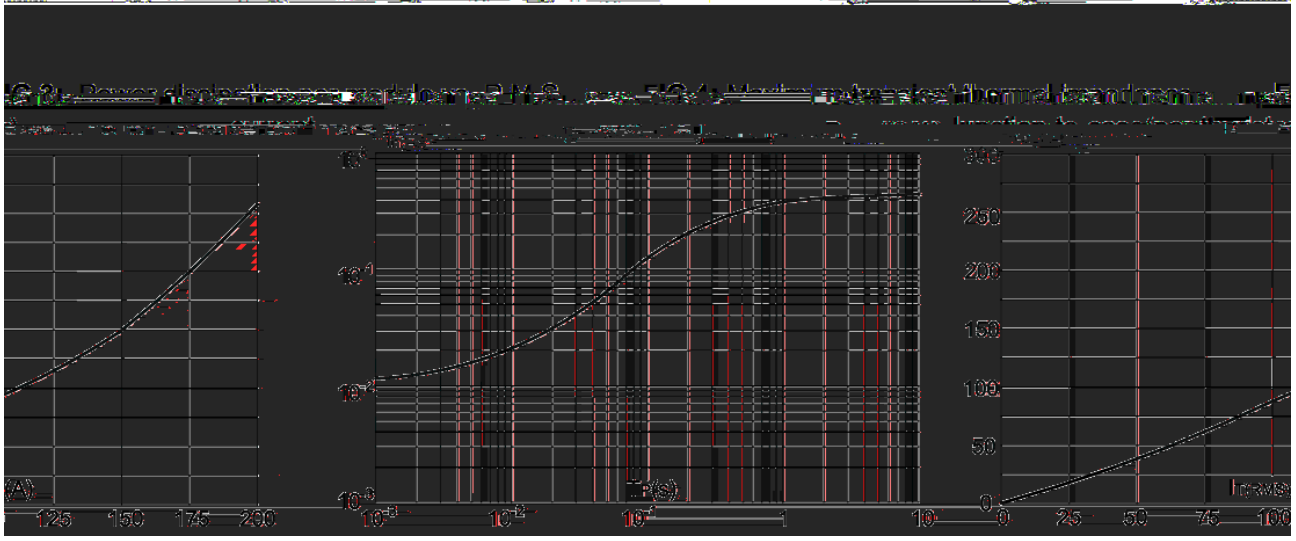

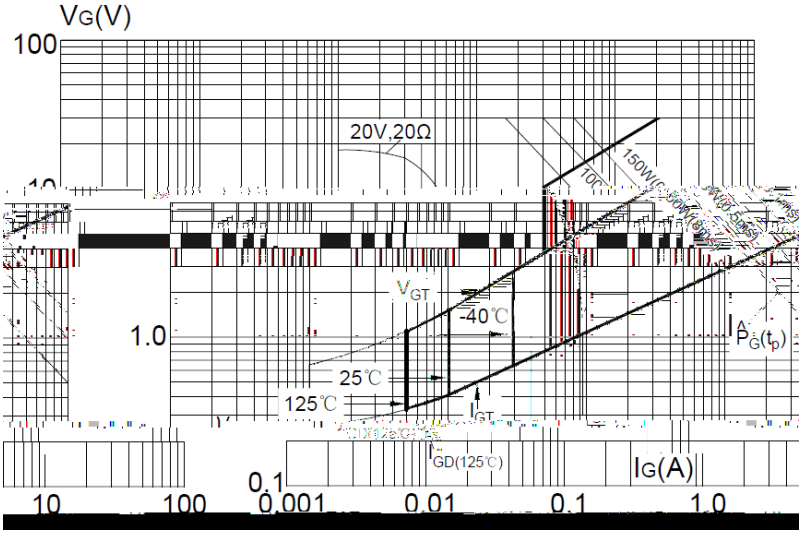

Circuit Diagram

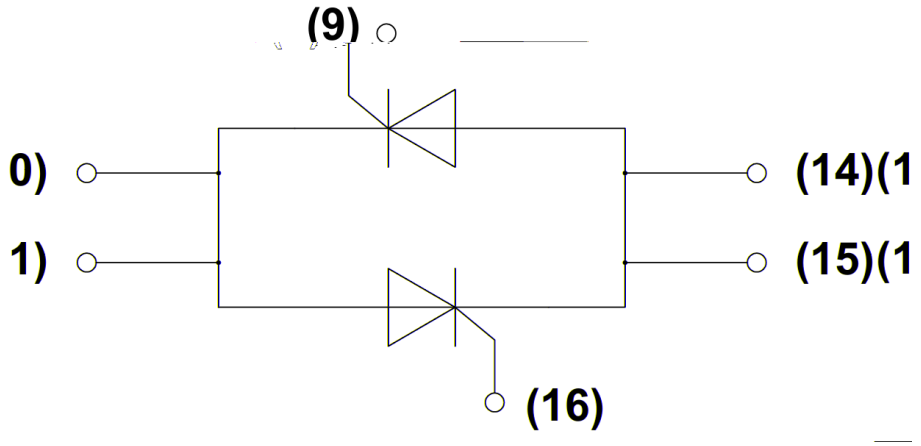
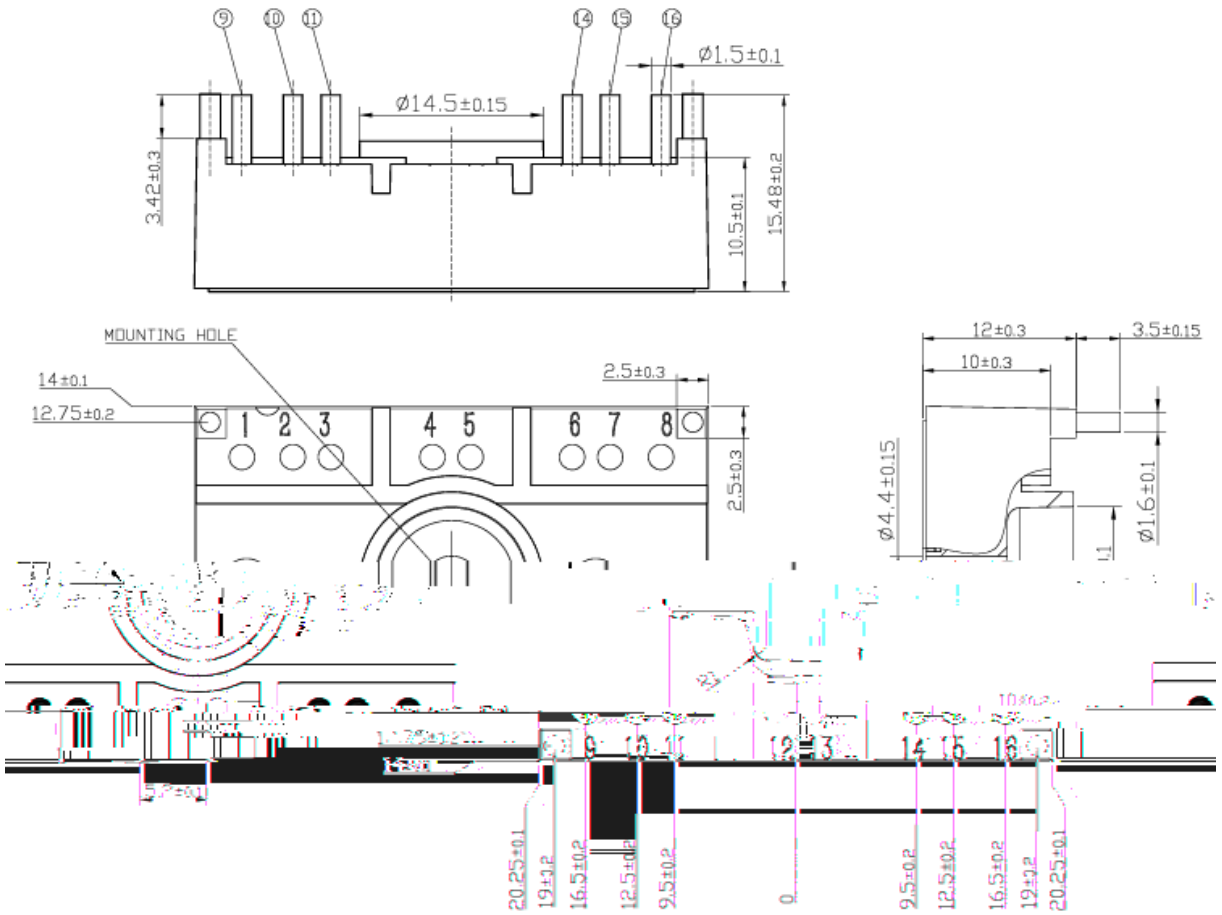
Package Outlines (mm)