(@ T_C = 25℃ unless otherwise specified)

Peak forward voltage	I_T=300A, t_P=380μs	V_T			1.80	V
Repetitive peak off-state current	V_D = V_{DRM},T_{vj} = 25℃	I_{DRM}			100	μA
	V_D = V_{DRM},T_{vj} = 125℃				30	mA
Reverse leakage current	V_R = V_{RRM},T_{vj} = 25℃	I_{RRM}			100	μA
	V_R = V_{RRM},T_{vj} = 125℃				30	mA
Threshold voltage	For power loss calculation only T_{vj} = 125℃,	V_{TO}			0.9	V
Dynamic resistance	T_{vj} = 125℃,	r_T			2.1	mΩ
Triggering gate current	V_D=12V R_L=30Ω	I_{GT}	20		120	mA
Holding current	I_T=1A	I_H			250	mA
Latching current	I_G=1.2 I_{GT}	I_L			300	mA
Critical rate of rise of voltage	V_D=2/3V_{DRM} Tvj=125℃ Gate Open	dv/dt	1000			V/μs
Triggering gate voltage	V_D=12V R_L=30Ω	V_{GT}			1.8	V
Non triggering gate voltage	V_D=V_{DRM} Tvj=125℃	V_{GD}	0.25			V

(@ T_C = 25℃ unless otherwise specified)

Thermal resistance, junction to case	per Thyristor	$R_{th(j-c)}$		0.35		/W
Mounting torque	Module torque to heatsink	M	1.7		2.3	N·m

All product information are copyrighted and subject to legal disclaimers

JMT150KQ18V1C	JMT150KQ18V1C	V1	42.9g/PCS	60 PCS	360 PCS

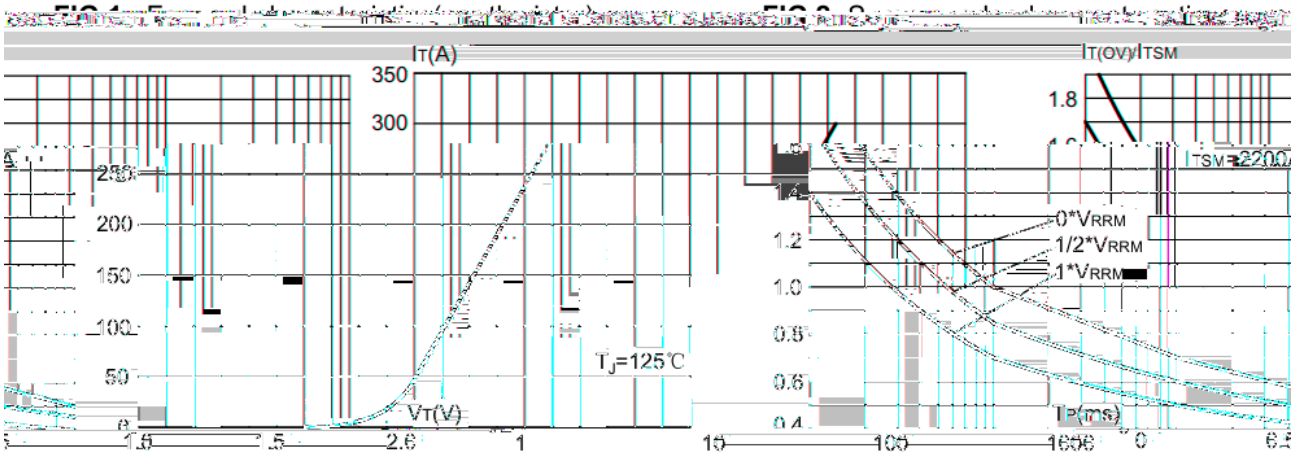

r dissipation per module vs. R.M.S. current **FIG.4:** Maximum transient thermal impedance **FIG.3:** Power

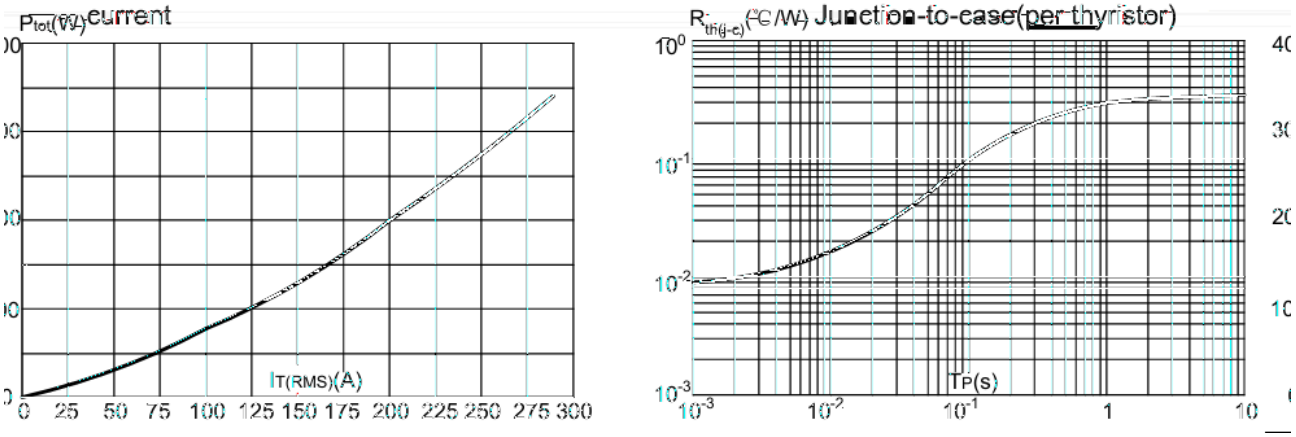

All product information are copyrighted and subject to legal disclaimers

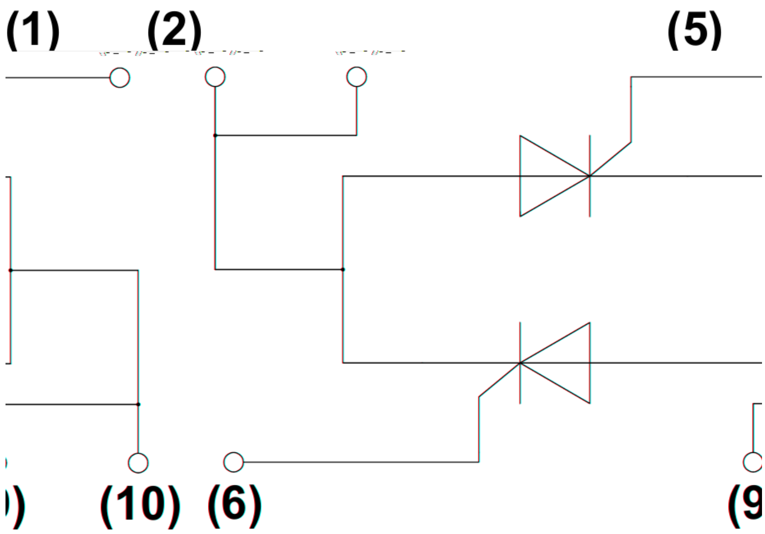

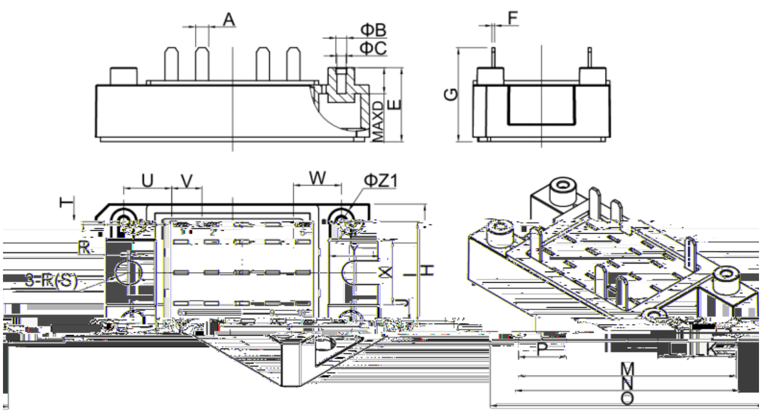

Unit of measurement: mm

Ref	Dimensions					
	Millimeters			Inches		
	Min	Typ	Max	Min	Typ	Max
A	[illegible]	[illegible]	[illegible]	[illegible]	[illegible]	[illegible]
B	2.3	2.5	2.7	[illegible]	0.098	0.106
C	[illegible]	2.1	2.3	0.075	[illegible]	[illegible]
D		6			0.236	
E	[illegible]	17	17.75	[illegible]	[illegible]	[illegible]
F	[illegible]	0.65	0.75	0.022	[illegible]	0.030
G	[illegible]	21.6	22.35	0.821	0.850	0.880
H	[illegible]	[illegible]	[illegible]	[illegible]	[illegible]	[illegible]
I	23	23.5	24	0.906	[illegible]	0.945
J	0.17	0.67	1.17	0.007	[illegible]	0.046
K	10.5	11	11.5	0.413	[illegible]	0.453
L	6.5	7	7.5	0.256	0.276	0.295
M	49.5	50	50.5	1.949	1.969	1.988
N	51	51.5	52	2.008	2.028	2.047
O	62.25	63	63.75	2.451	2.480	2.510
P	10.25	11	11.75	0.404	0.433	0.463
Q	5.6	6.1	6.6	0.220	0.240	0.260
R	[illegible]	0.5	[illegible]	[illegible]	[illegible]	[illegible]
S	[illegible]	[illegible]	[illegible]	[illegible]	[illegible]	[illegible]
T	0.17	0.67	[illegible]	0.007	[illegible]	[illegible]
U	10.5	11	[illegible]	[illegible]	0.433	[illegible]
V	6.5	7	[illegible]	0.256	[illegible]	0.295
W	10.5	11	[illegible]	[illegible]	0.433	[illegible]
X	13.9	14.9	[illegible]	[illegible]	[illegible]	[illegible]
Y	10.3	11.3	[illegible]	[illegible]	0.445	[illegible]

Jiangsu JieJie Microelectronics Co., Ltd.
All product information are copyrighted and subject to legal disclaimers

Information furnished in this document is believed to be accurate and reliable. However, Jiangsu JieJie Semiconductor Co., Ltd assumes no responsibility for the consequences of use without consideration for such information nor use beyond it. This information in this document is subject to change without prior notice. Notwithstanding this, Jiangsu JieJie will fully comply with the terms outlined in a signed agreement. Products and information provided in this document have no infringement of patents. Jiangsu JieJie assumes no responsibility for any infringement of other rights of third parties which may result from the use of such products and information. This document is the initial release, dated 5 March 2026. This document supersedes and replaces all information previously supplied.

is registered trademark of Jiangsu JieJie Semiconductor Co., Lt ©2026 Jiangsu JieJie Semiconductor Co., Ltd. All rights reserved.