0

℃		



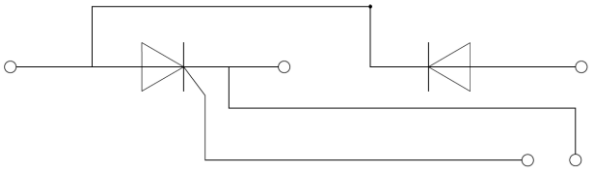

	℃			
				℃
				℃

	℃					
	℃					
	℃					
	℃					
	℃					
	℃					
	℃					
	℃					

.					
			±		

FIG.1: Power dissipation vs. on-state current (per thyristor or diode)

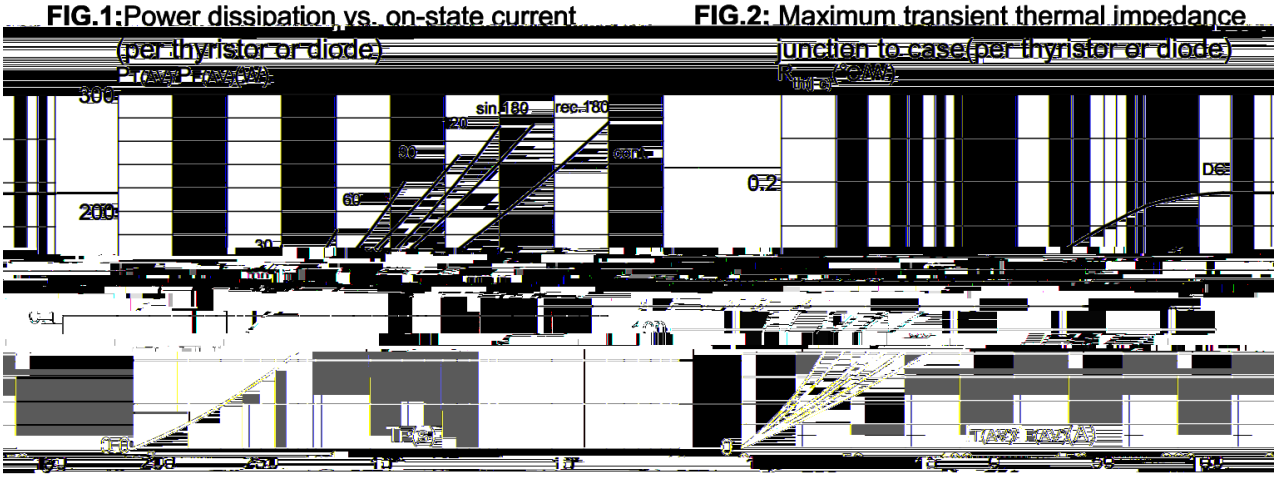

FIG.2: Maximum transient thermal impedance junction to case(per thyristor or diode)



FIG.5 Gate trigger characteristics

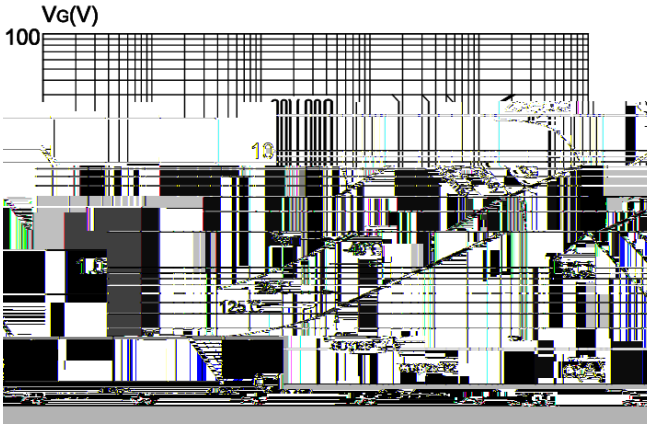

FIG.6: Forward current vs. case temperature (per thyristor or diode)

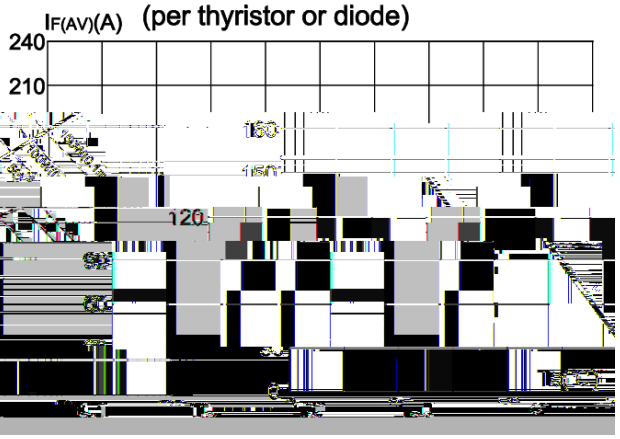

.

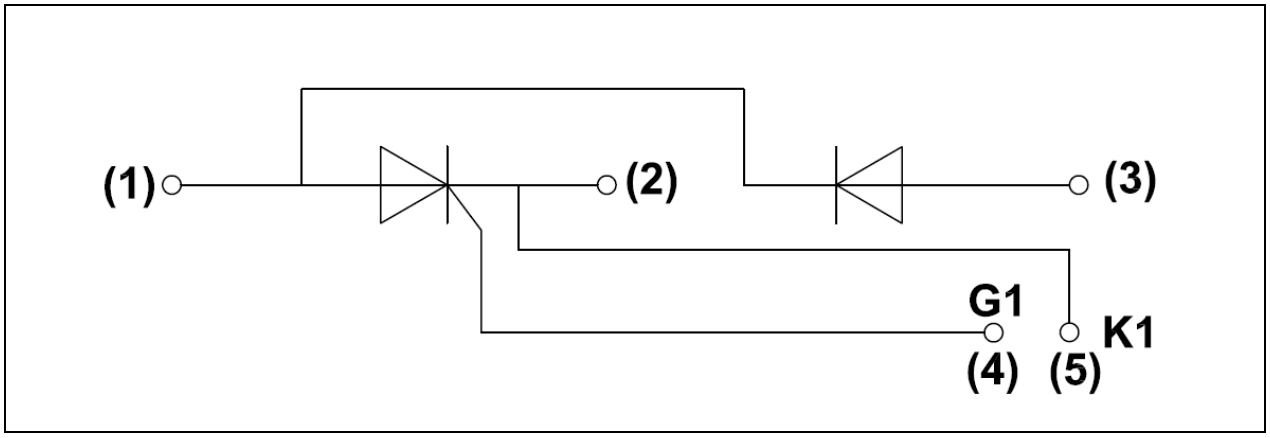
(1)
(2)
(3)
G1
K1
(4)
(5)

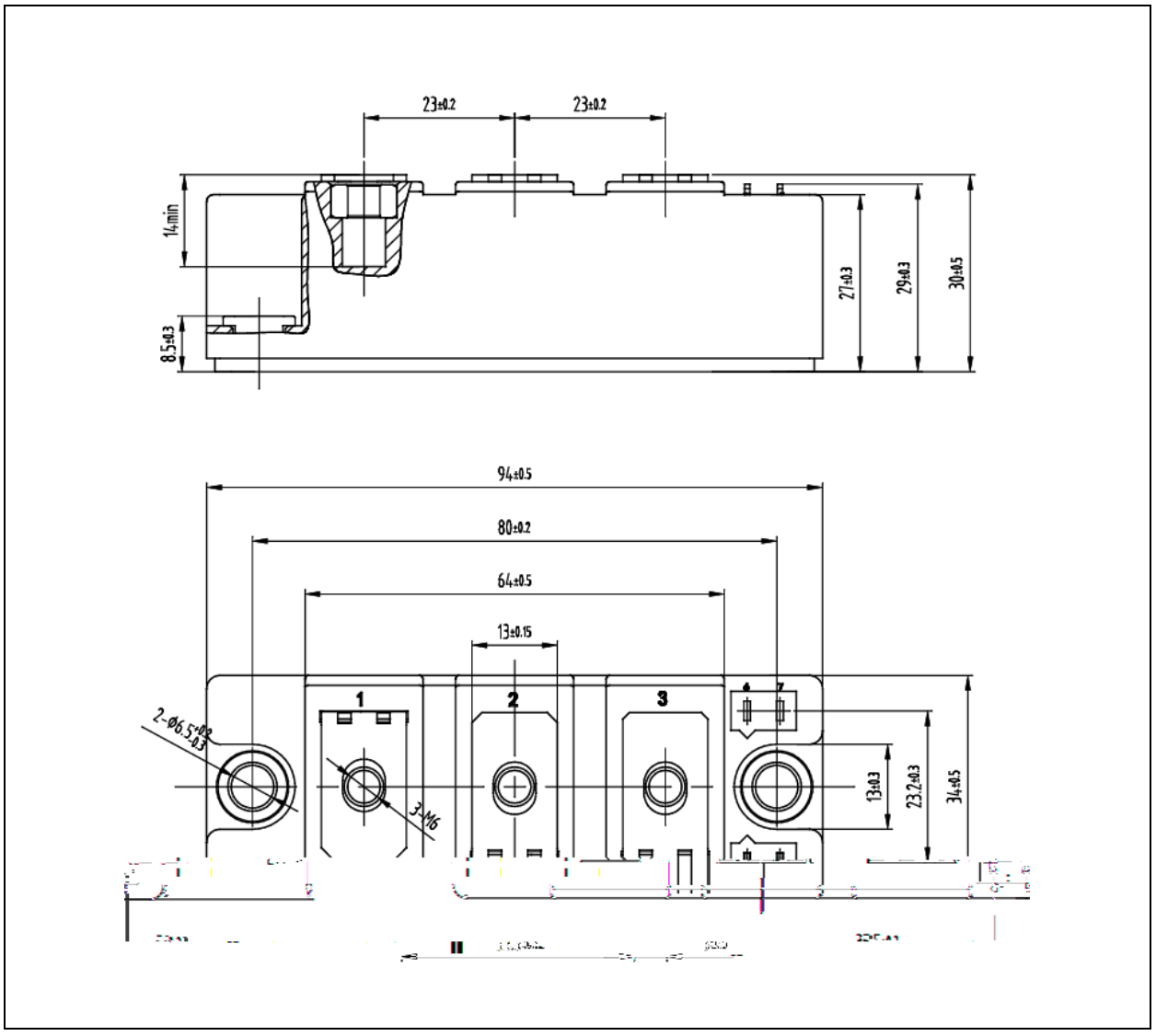
23±0.2
23±0.2
14min
8.5±0.3
27±0.3
29±0.3
30±0.5
94±0.5
80±0.2
64±0.5
13±0.15
1
2
3
2-Ø6.5±0.3
3-M6
13±0.3
23.2±0.3
34±0.5