	℃			
				℃
				℃

	℃					
	℃					
	℃					
	℃					
	℃					
	℃					
	℃					
	℃					

			±		

FIG.1:Power dissipation vs. on-state current (per thyristor or diode)

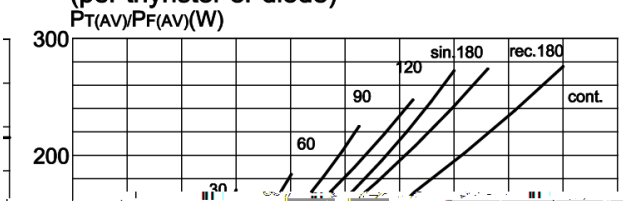

FIG.2: Maximum transient thermal impedance junction to case(per thyristor or diode)

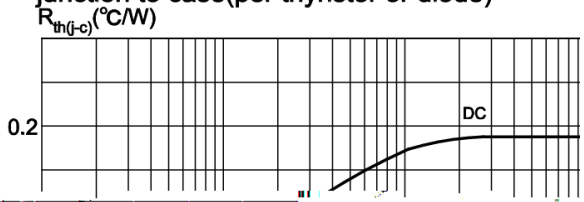

FIG.5 Gate trigger characteristics

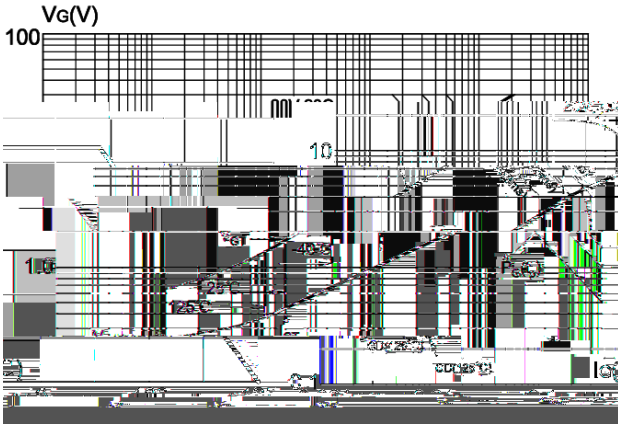

FIG.6: Forward current vs. case temperature (per thyristor or diode)

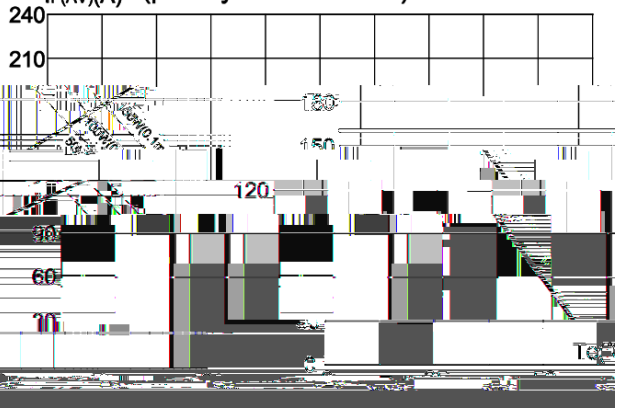

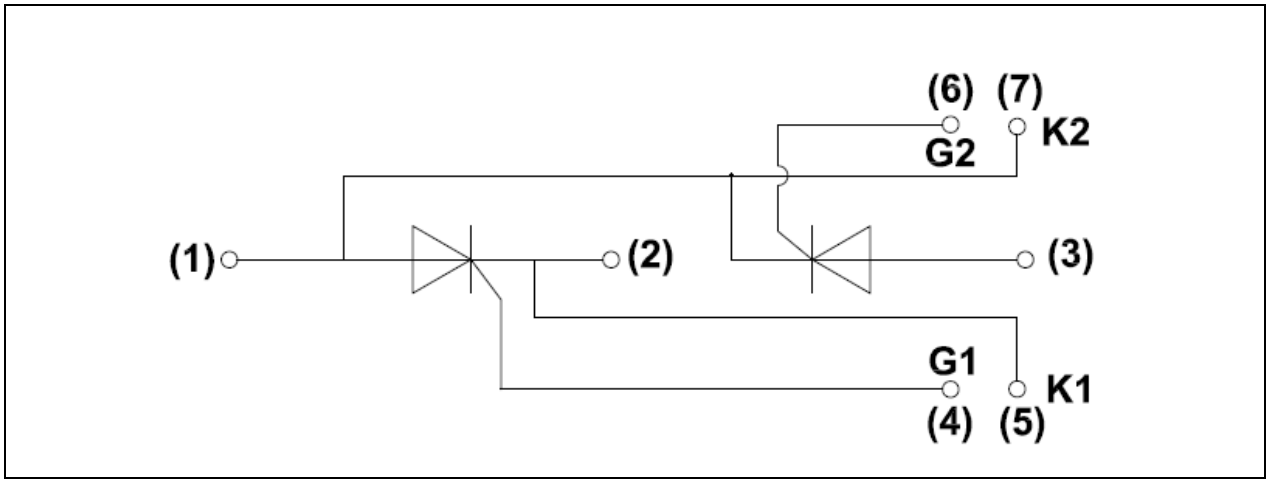
(6)
(7)
G2
K2
(1)
(2)
(3)
G1
K1
(4)
(5)

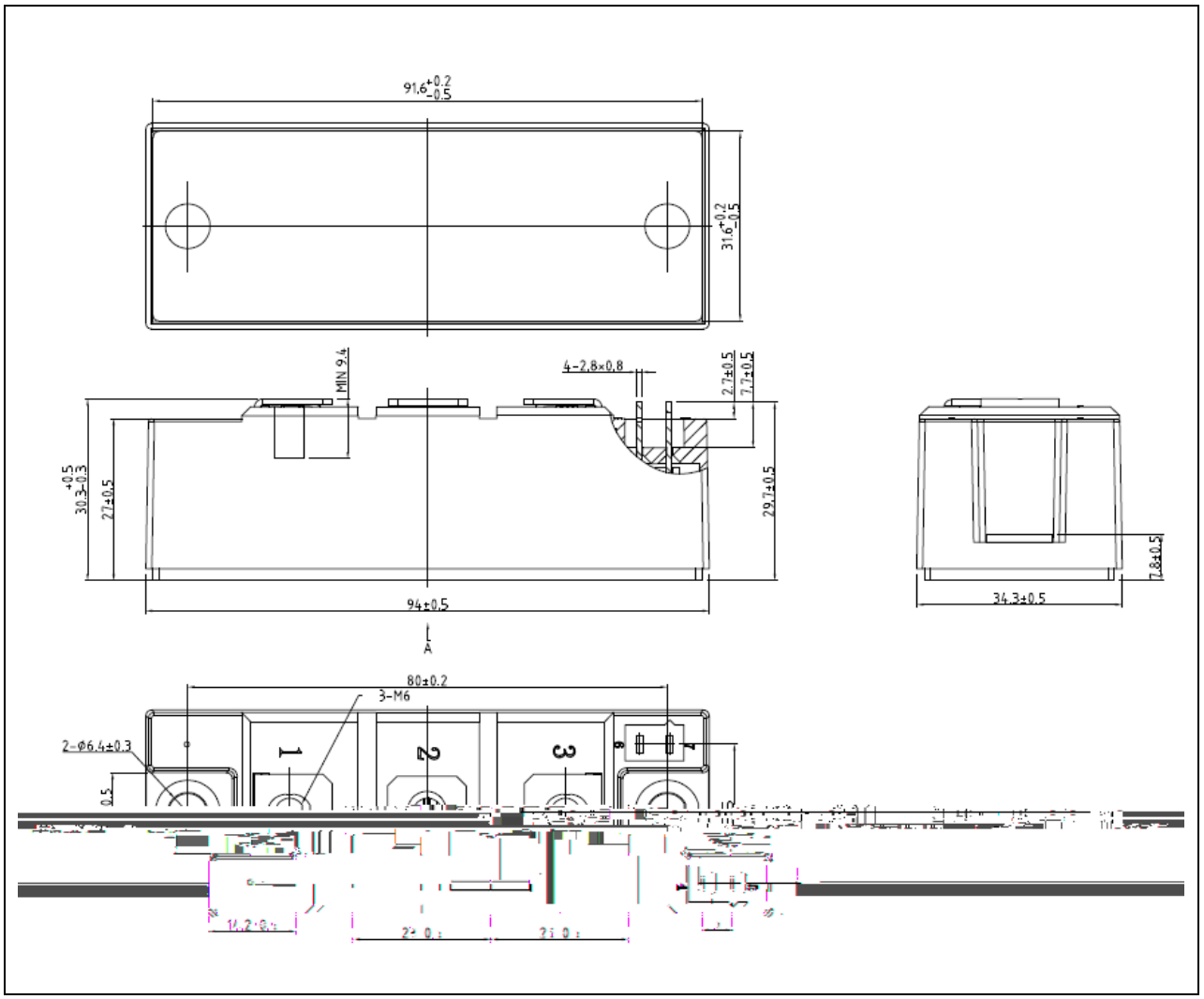
91,6+0.2 -0.5
31,6+0.2 -0.5
MIN 9.4
4-2,8×0,8
2.7±0.5
7.7±0.5
30.3+0.5 -0.3
27±0.5
29.7±0.5
94±0.5
7.8±0.5
34.3±0.5
A
80±0.2
3-M6
2-Φ6.4±0.3
0.5
1
2
3