| | | | | |
|---|---|---|---|---|
| | | | | |

| | | | | | | |
|---|---|---|---|---|---|---|
| | | | | | | |
| | | | | | | |
| | ℃ | | | | | |
| | ℃ | | | | | |
| | ℃ | | | | | |
| | ℃ | | | | | |
| | ℃ | | | | | |
| | ℃ | | | | | |
| | | | | | | |
| | | | | | | |
| | | | | | | |
| | ℃ | | | | | |
| | | | | | | |
| | ℃ | | | | | |

| | | | | | |
|---|---|---|---|---|---|
| | | | | | |

FIG.1:Power dissipation vs. on-state current (per thyristor or diode)

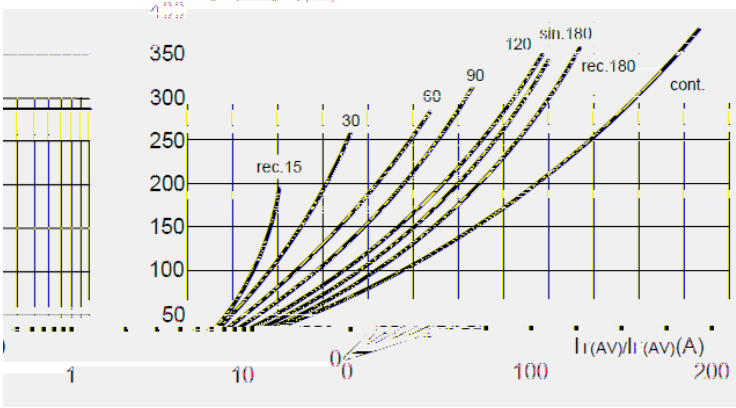


FIG.2: Maximum transient thermal impedance junction to case(per thyristor or diode)

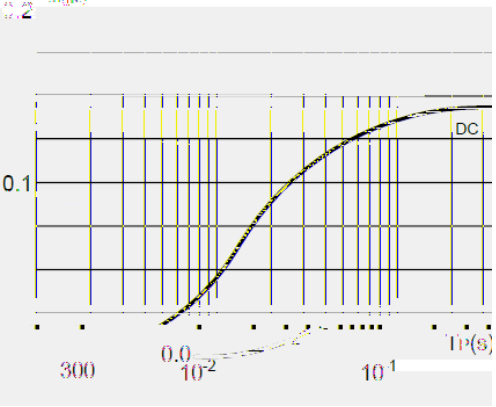


FIG.3:Forward characteristics ...emperature (per thyristor or diode)

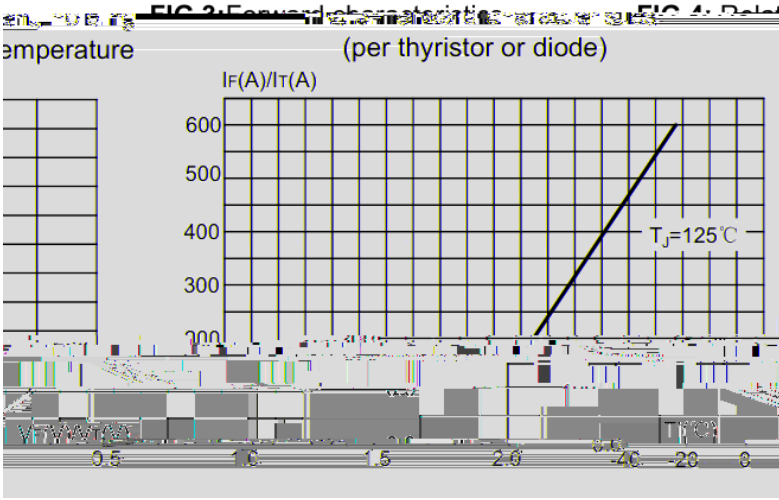


FIG.4: ...current and latching current versus junction te...

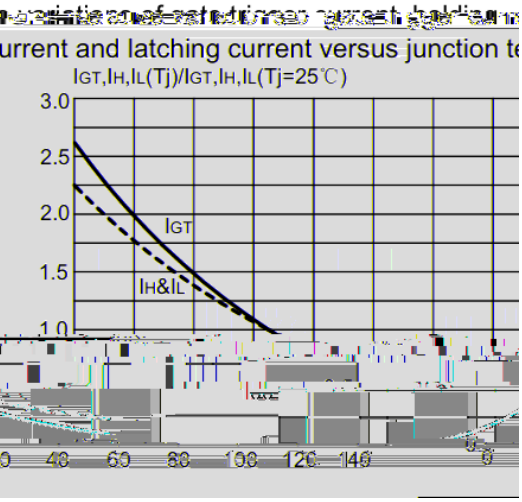


FIG.5 Gate trigger characteristics

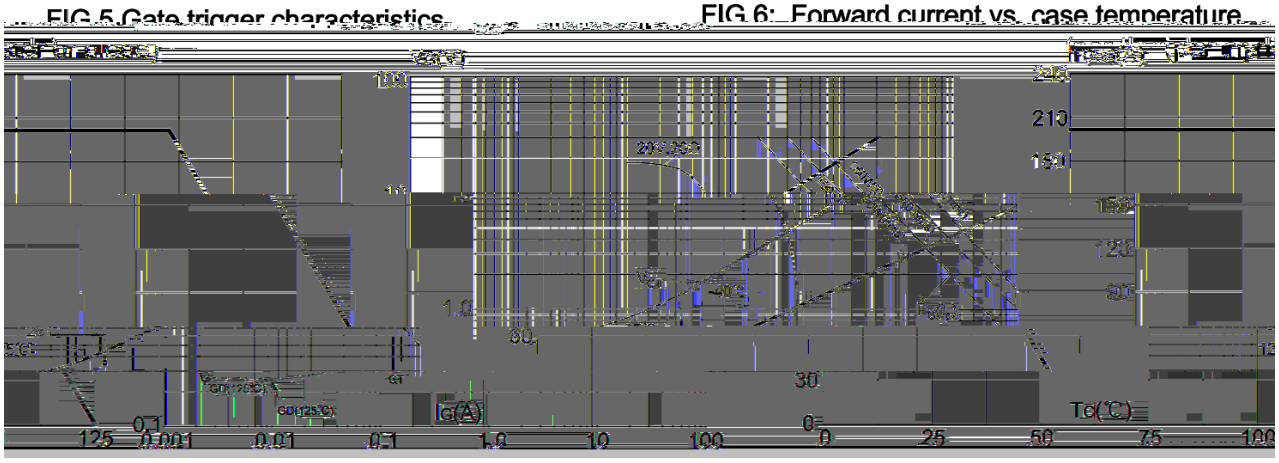


FIG.6: Forward current vs. case temperature

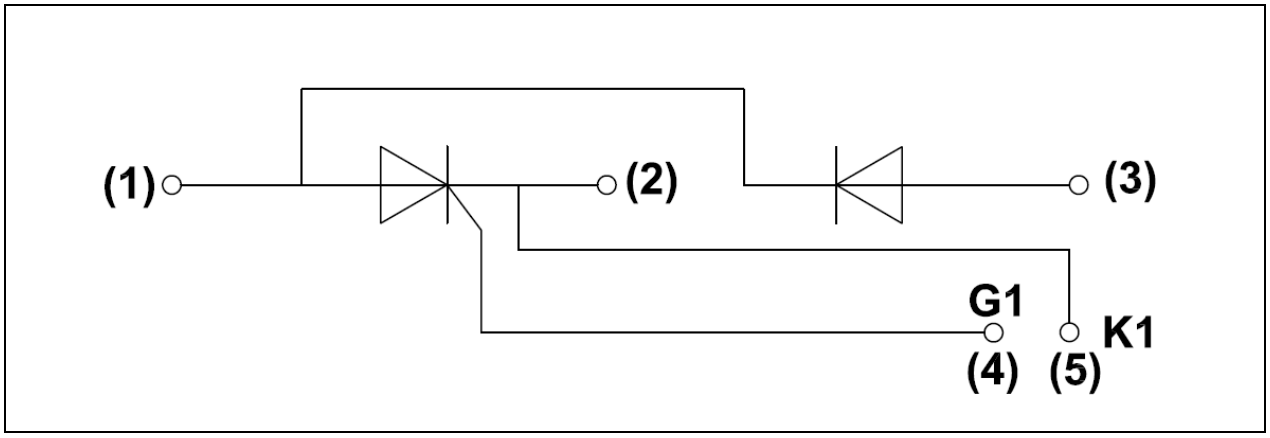
(1)
(2)
(3)
G1
K1
(4)
(5)

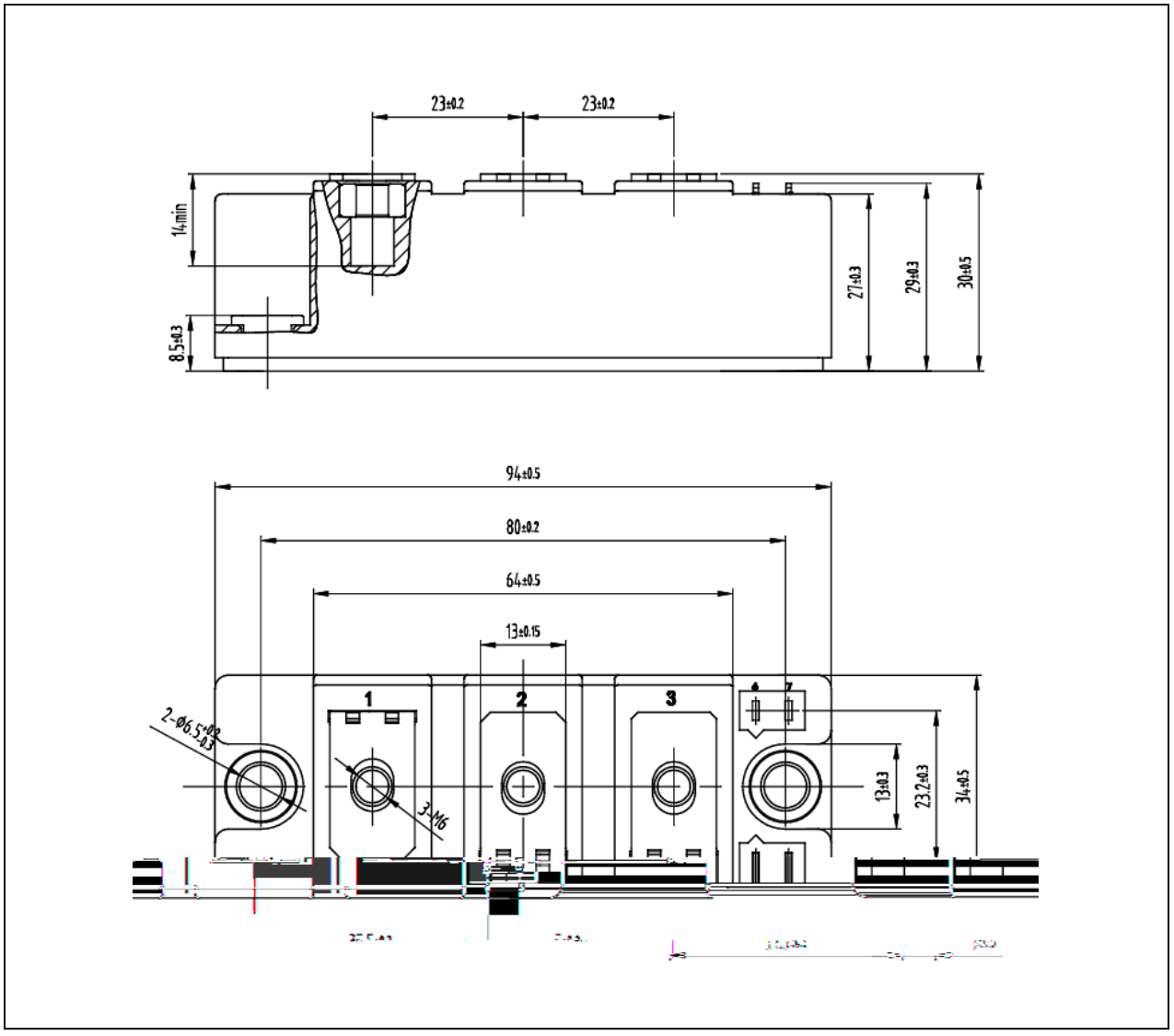
23±0.2
23±0.2
14min
8.5±0.3
27±0.3
29±0.3
30±0.5
94±0.5
80±0.2
64±0.5
13±0.15
1
2
3
2-Ø6.5±0.3
3-M6
13±0.3
23.2±0.3
34±0.5