JMT250KT16T2

Thyristor Module

Features

- Half-bridge SCR configuration integrated in a single package
- High-thermal-conductivity DBC insulation for excellent heat dissipation
- Vacuum soldering technology for enhanced reliability

Product Summary

Parameter	Value	Unit
V_{RRM}	1600	V
$I_{T(AV)}$(@ T_C = 85)	250	A
I_{TSM}(@ t_P = 10ms)	8300	A
V_T(Max)	1.80	V

Applications

- Heating control
- Light control system
- DC motor

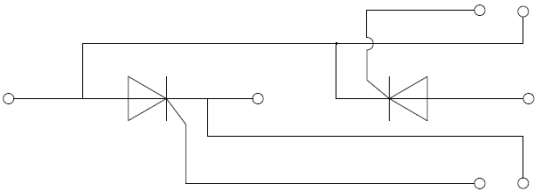

Absolute Maximum Ratings (@ T_C = 25°C unless otherwise specified)

Parameter	Conditions	Symbol	Values	Unit
Repetitive peak off-state voltage	Tvj = 25°C	V_{DRM}	1600	V
Repetitive peak reverse voltage	Tvj = 25°C	V_{RRM}	1600	V
Non-repetitive peak off-state voltage	Tvj = 25°C	V_{DSM}	1700	V
Non-repetitive peak reverse voltage	Tvj = 25°C	V_{RSM}	1700	V
Average forward current	T_C = 85°C	$I_{T(AV)}$	250	A
Forward surge current	1/2 cycle, Sine wave, 50Hz Tvj = 25	I_{TSM}	8300	A
I^2t value for fusing		I^2t	344400	A^2s
Critical rate of rise of on-state current	I_G=2×I_{GT}	di/dt	150	A/μs
RMS isolation voltage	A.C 50Hz(1s/1min)	V_{ISO}	3600/3000	V
Junction temperature range		T_J	-40 ~ +125	
Storage temperature range		T_{stg}	-40 ~ +125	

Jiangsu JieJie Microelectronics Co., Ltd.
All product information are copyrighted and subject to legal disclaimers

Electrical Characteristics (@ T_C = 25°C unless otherwise specified)

Parameter	Conditions	Symbol	Values			Unit
			Min.	Typ.	Max.	
Peak forward voltage	I_T=750A, t_P=380μs	V_T			1.80	V
Repetitive peak off-state current	$V_D = V_{DRM}, T_{vj}$ = 25	I_{DRM}			100	μA
	$V_D = V_{DRM}, T_{vj}$ = 125				60	mA
Reverse leakage current	$V_R = V_{RRM}, T_{vj}$ = 25	I_{RRM}			100	μA
	$V_R = V_{RRM}, T_{vj}$ = 125				60	mA
Threshold voltage	For power loss calculation only T_{vj} = 125 ,	V_{TO}			0.8	V
Dynamic resistance	T_{vj} = 125					

Jiangsu JieJie Microelectronics Co., Ltd.
All product information are copyrighted and subject to legal disclaimers

All product information are copyrighted and subject to legal disclaimers

Circuit Diagram

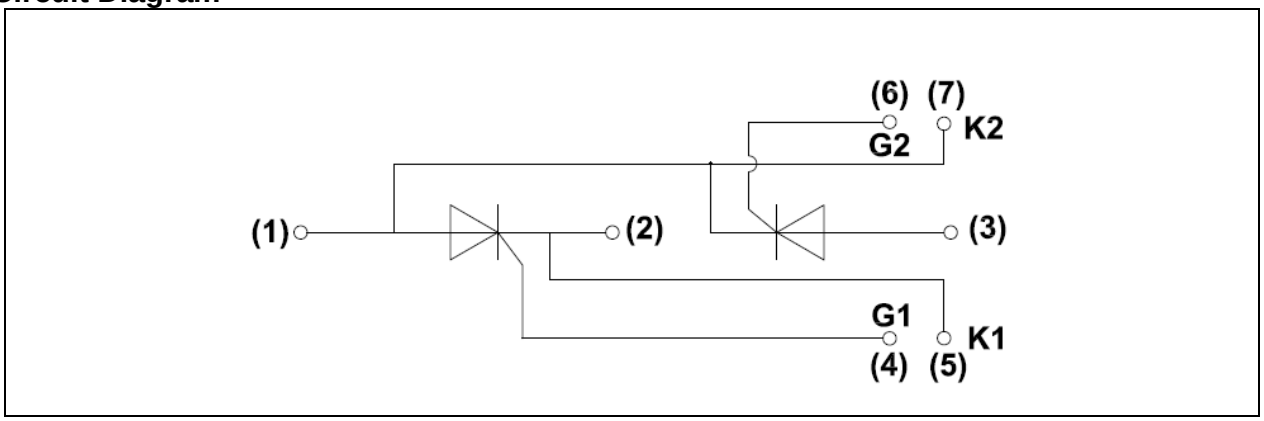

Package Outlines (mm)

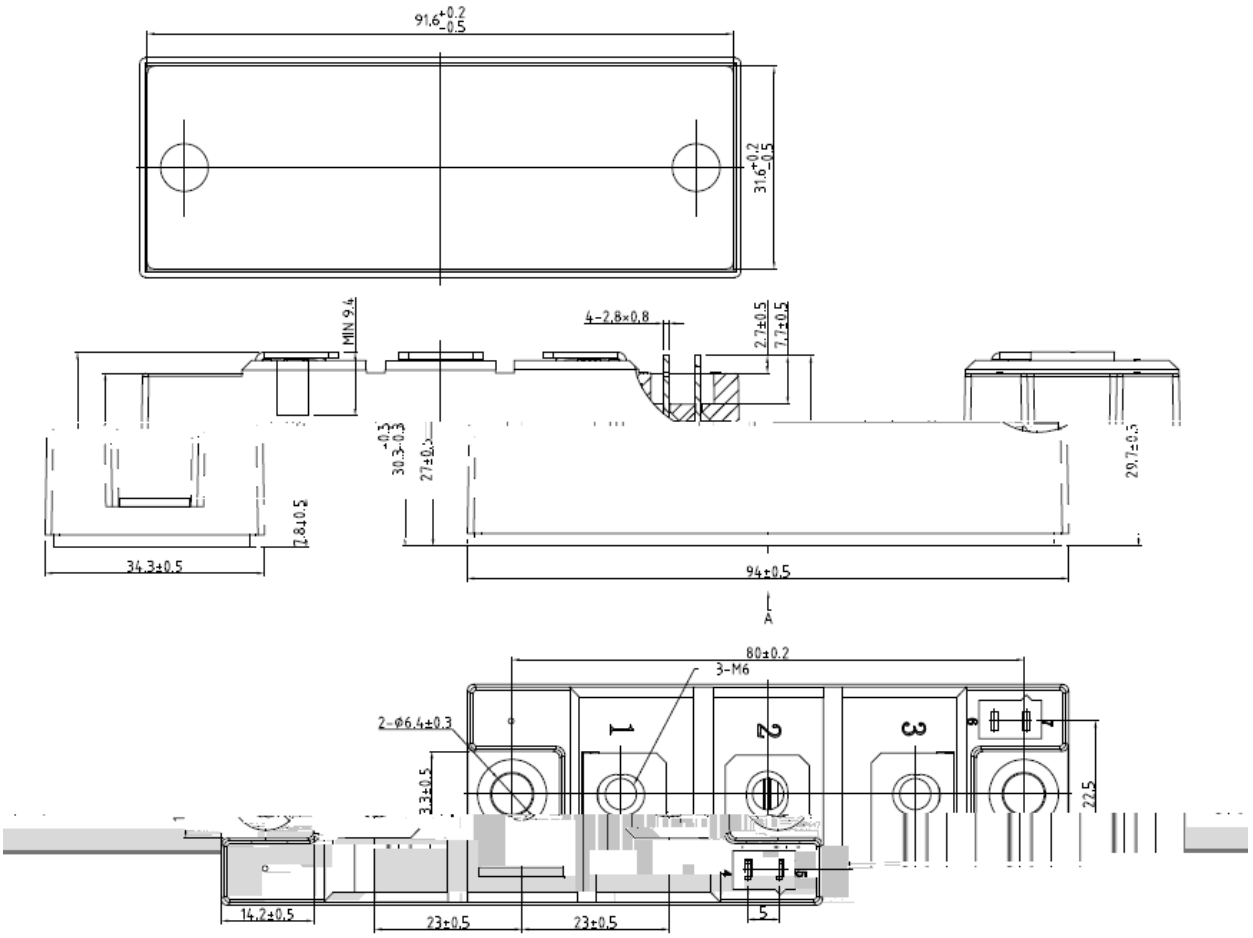

Package Outlines (mm)

All product information are copyrighted and subject to legal disclaimers

Jiangsu JieJie Semiconductor Co., Ltd assumes no responsibility for the consequences of use without consideration for such information nor use beyond it. This information in this document is subject to change without prior notice. Notwithstanding this, Jiangsu JieJie will fully comply with the terms outlined in a signed agreement. Products and information provided in this document have no infringement of patents. Jiangsu JieJie assumes no responsibility for any infringement of other rights of third parties which may result from the use of such products and information. This document is the initial release, dated 14 July 2026. This document supersedes and replaces all information previously supplied.

JMT is registered trademark of Jiangsu JieJie Semiconductor Co., Lt ©2026 Jiangsu JieJie Semiconductor Co., Ltd. All rights reserved.