JMT40KH16T1AC

Thyristor Module

Features

Parameter	Value	Unit
℃		

Applications



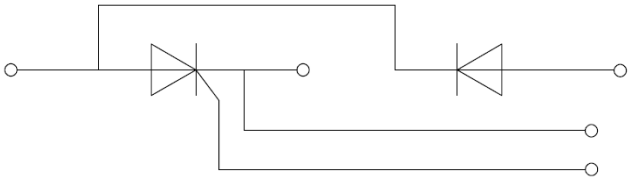

Absolute Maximum Ratings

Parameter	Conditions	Symbol	Values	Unit
	℃			
				℃
				℃

Electrical Characteristics

Parameter	Conditions	Symbol	Values			Unit
			Min.	Typ.	Max.	
	℃					
	℃					
	℃					
	℃					
	℃					
	℃					
	℃					
	℃					

Thermal Characteristics

Parameter	Conditions	Symbol	Values			Unit
			Min.	Typ.	Max.	

Ordering Information

Device	Marking	Package	Weight	Inner Box	Per Carton

Typical Electrical & Thermal Characteristics

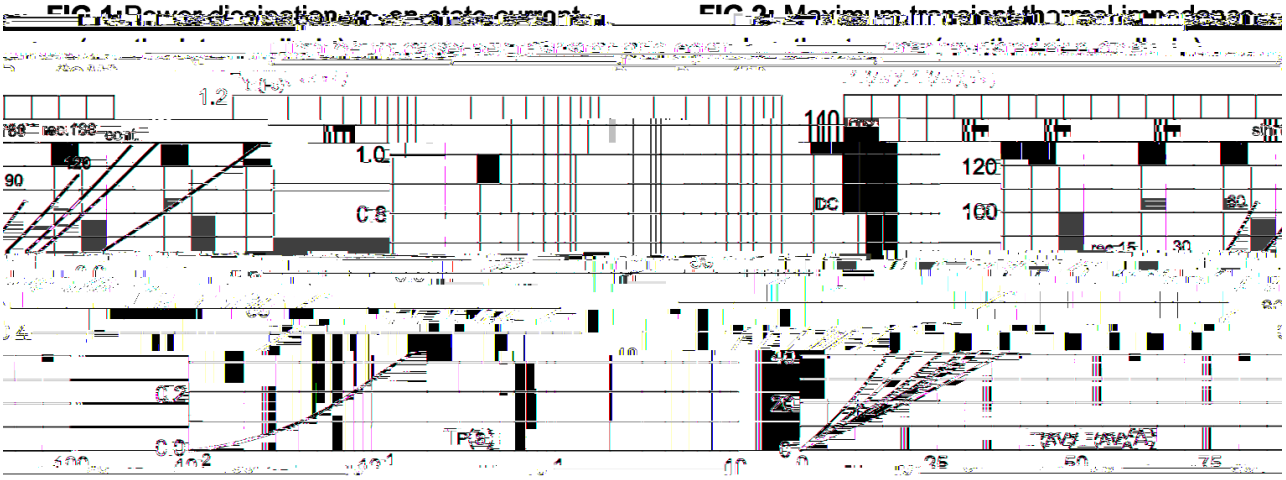

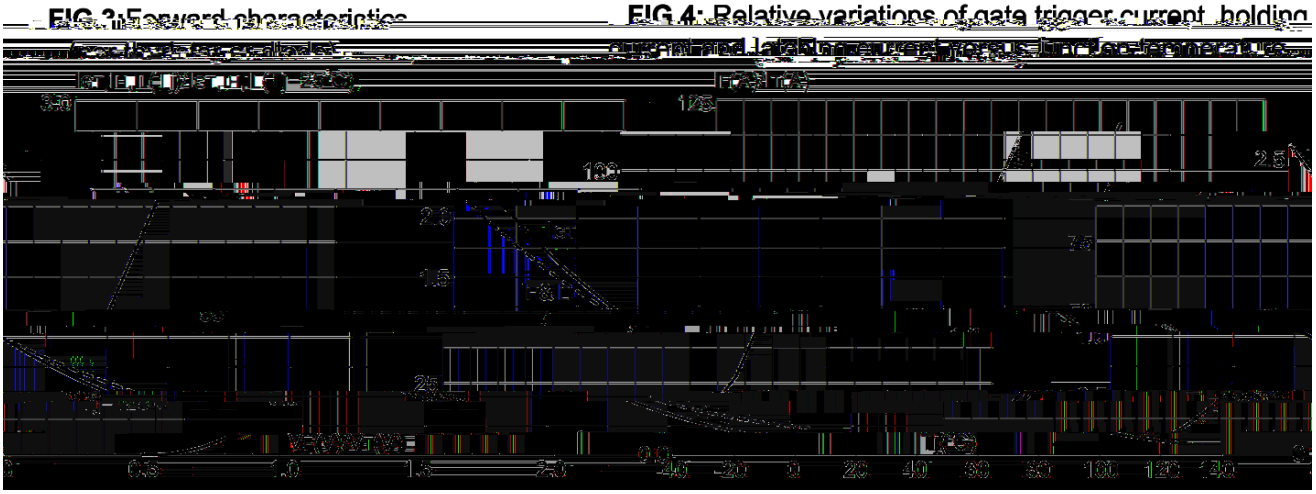

FIG.5 Gate trigger characteristics

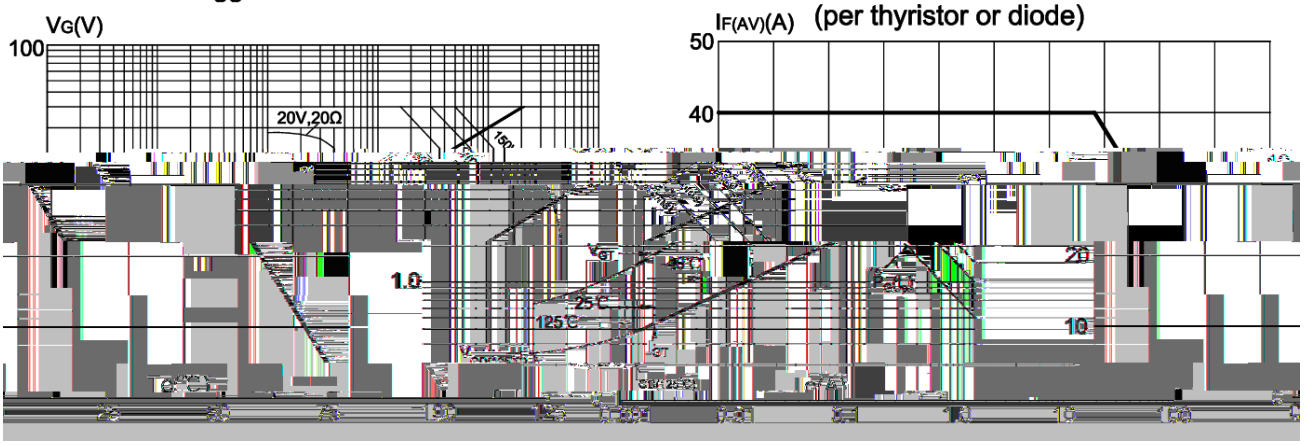

FIG.6: Forward current vs. case temperature (per thyristor or diode)

Circuit Diagram

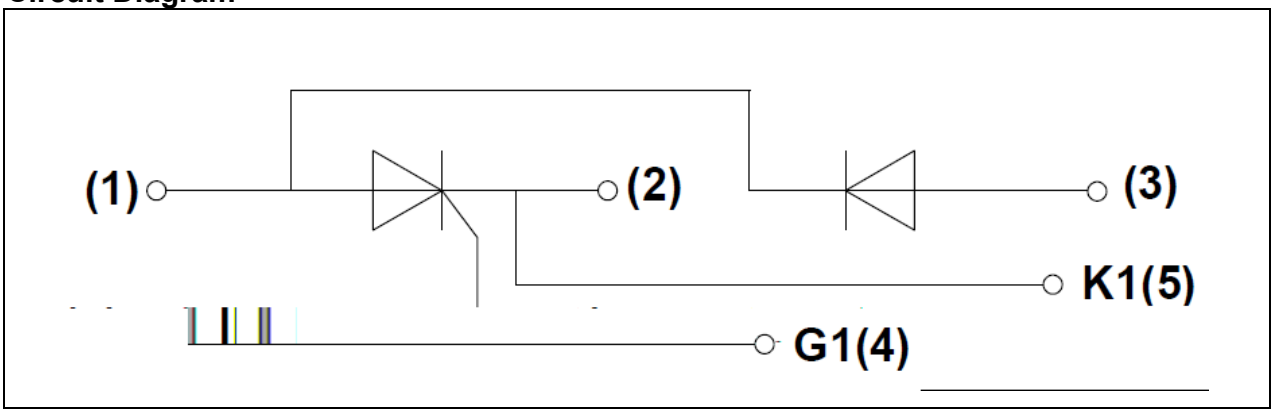

Package Outlines (mm)

