	℃					
	℃					
	℃					
	℃					
	℃					
	℃					
	℃					
	℃					

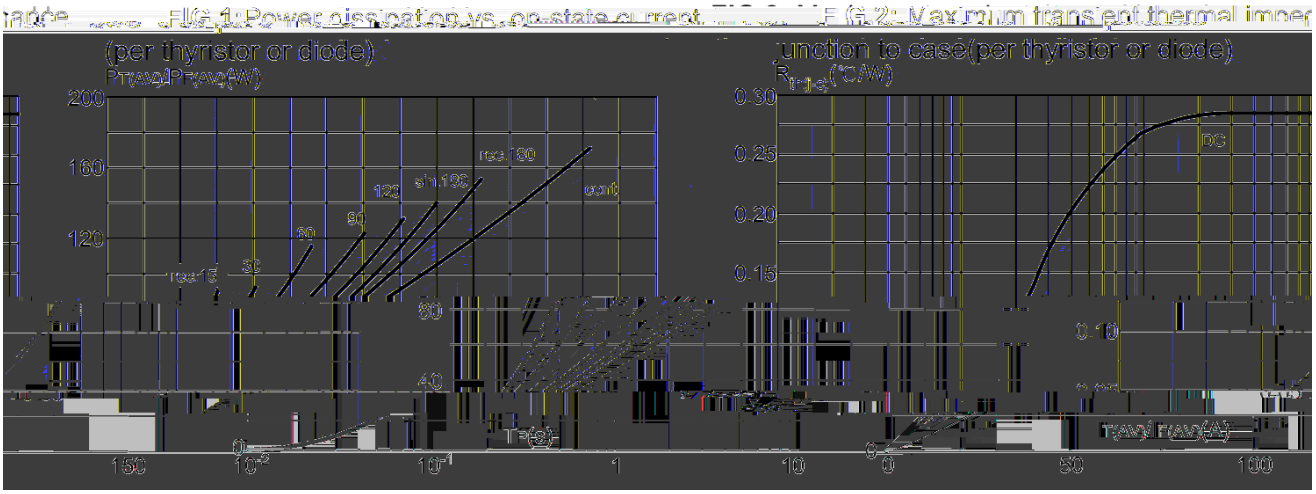

FIG.3: Forward characteristics

FIG.4: Relative variations of gate trigger current, holding current and latching current versus junction temperature

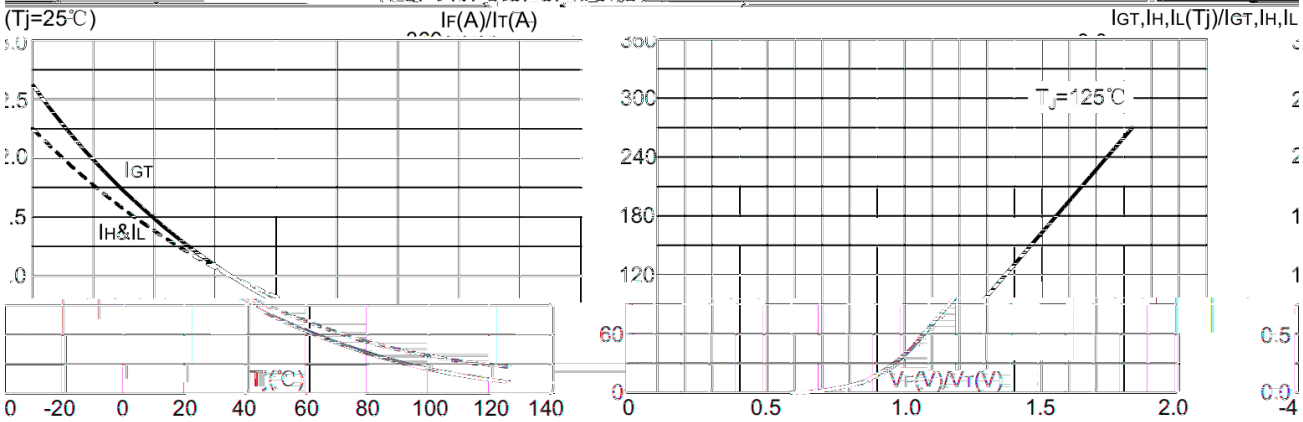

FIG.5 Gate trigger characteristics

FIG.6: Forward current vs. case temperature

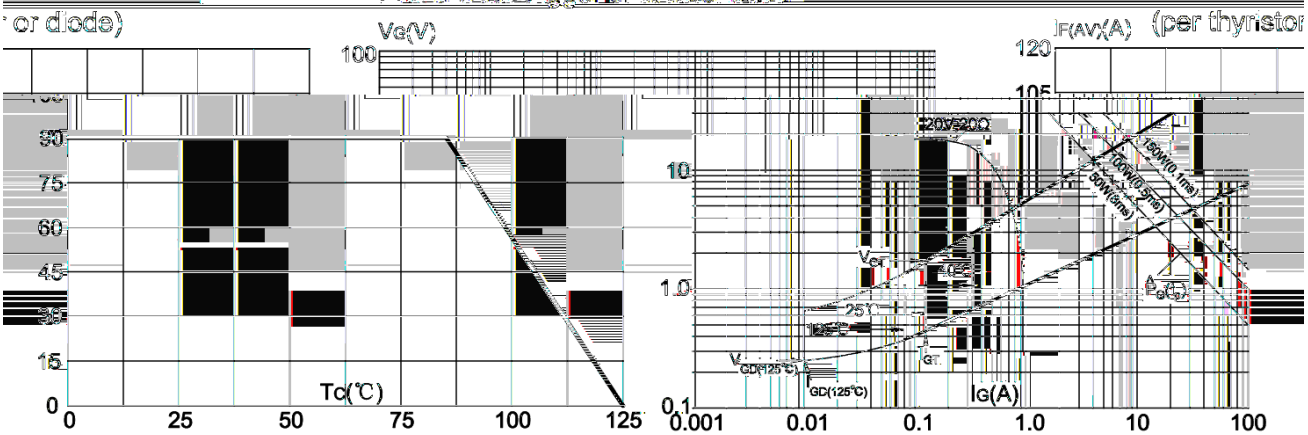

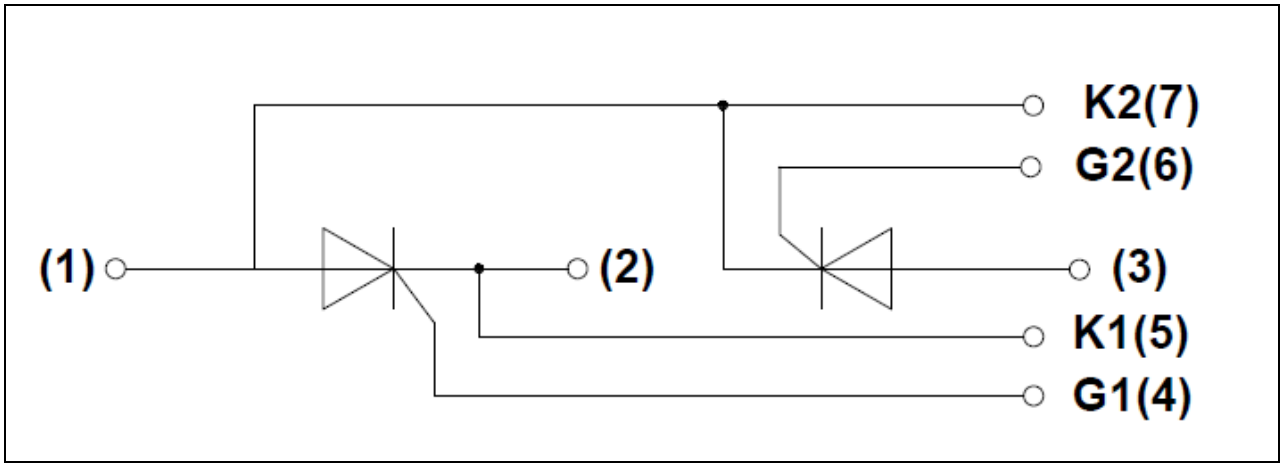
K2(7)
G2(6)
(1)
(2)
(3)
K1(5)
G1(4)

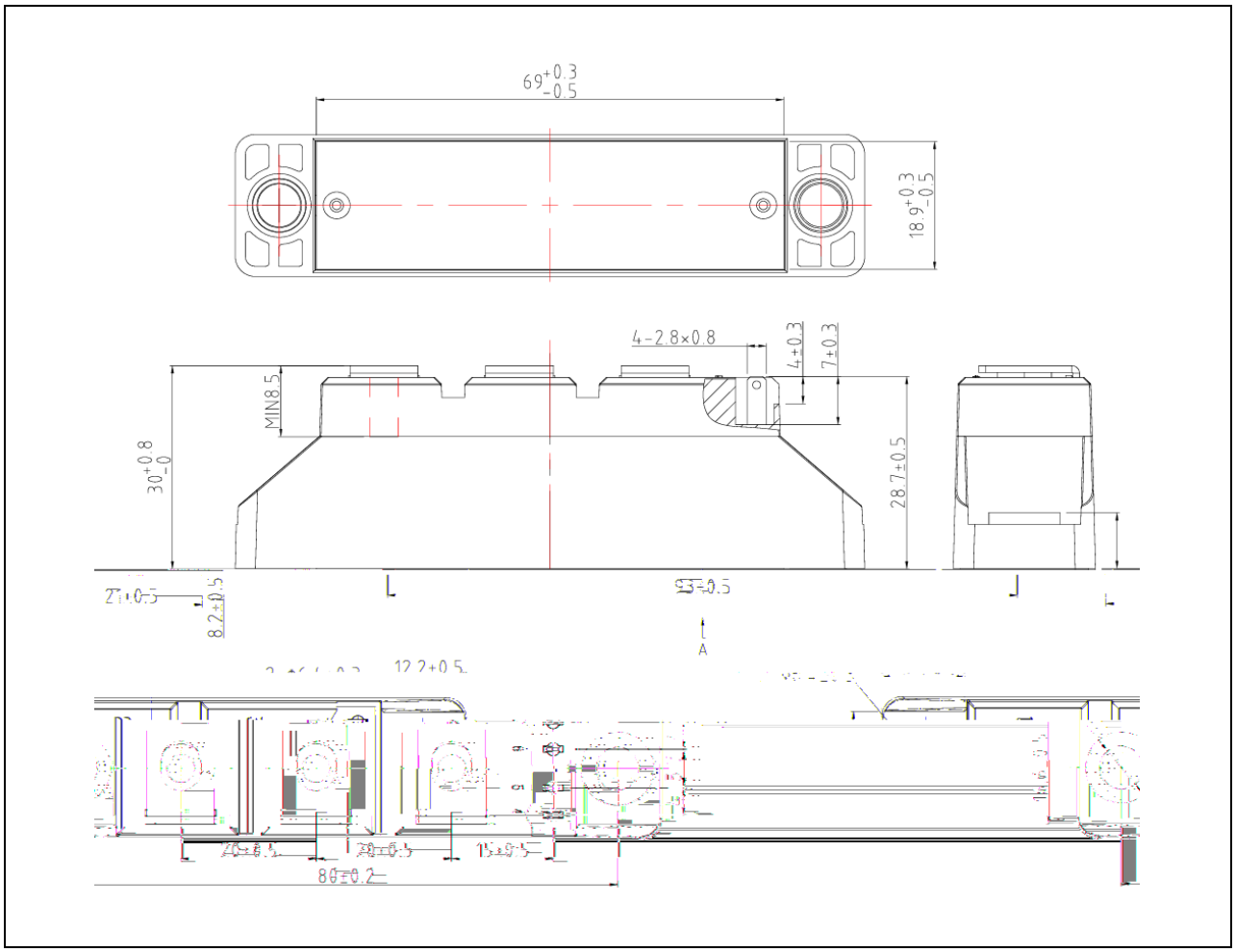
69+0.3 -0.5
18.9+0.3 -0.5
4-2.8×0.8
4±0.3
7±0.3
MIN8.5
30+0.8 -0
28.7±0.5
8.2±0.5
A
12.2±0.5
15±0.5
80±0.2